# 42" FULLY INTEGRATED BOTTOM FREEZER REFRIGERTORS

## DETAILED PLANNING DIMENSIONS GUIDE

**(BASE UNIT REQUIRES SUITE-COORDINATING FULL HEIGHT PANEL KIT OR CUSTOM PANELS AND HANDLES)**

**JF42NXFXDE – 41¾" (W) x 82⅞" (H) x 24" (depth without door panels/handles)**

## BASE UNIT + FULL HEIGHT PANEL KIT = FINISHED REFRIGERATOR

Easily transform these overlay refrigerators into one of our signature kitchen suite designs with one of our suite-coordinating stainless steel panel kits. To do so, you must order one of the overlay base units (left column) and one of the suite-coordinating panel kits. The kits include refrigerator and freezer door panels, air grille and pre-installed handles.

| Base Unit Model Number | Coordinating Stainless Full Height Panel Kits | | | |
|---|---|---|---|---|
| | RISE™ Stainless | | NOIR™ Stainless | |
| French Door<br>JF42NXFXDE | JBFFS42NHL |  | JBFFS42NHM |  |

## OPTIONAL ACCESSORIES FOR CUSTOM OVERLAY DESIGNS



### ARMOIRE-STYLE DOOR PANEL KIT

**W10663564** – 42" – Obsidian Interior

- For use with fully integrated and flush refrigerators
- Enables installation and proper venting of full height custom door panels (not included) that hide the top panel
- Includes left and right grille brackets and machine compartment cover

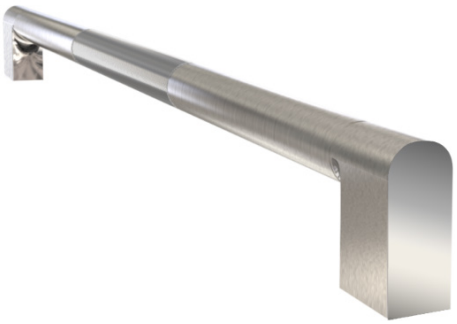

### RISE™ STAINLESS HANDLE KIT

**W11296021** – 42" French Door

- For use with Custom Overlay fully integrated built-in refrigerators



### NOIR™ STAINLESS HANDLE KIT

**W11194769** – 42" French Door

- For use with Custom Overlay fully integrated built-in refrigerators

Because Whirlpool Corporation policy includes a continuous commitment to improve our products, we reserve the right to change materials and specifications without notice.

Dimensions are for planning purposes only. For complete details, see Installation Instructions packed with product. Specifications subject to change without notice.

# 42" FULLY INTEGRATED BOTTOM FREEZER REFRIGERTORS

## DETAILED PLANNING DIMENSIONS GUIDE

**(BASE UNIT REQUIRES SUITE-COORDINATING FULL HEIGHT PANEL KIT OR CUSTOM PANELS AND HANDLES)**

**JF42NXFXDE – 41¾" (W) x 82⅞" (H) x 24" (depth without door panels/handles)**

## PRODUCT DIMENSIONS

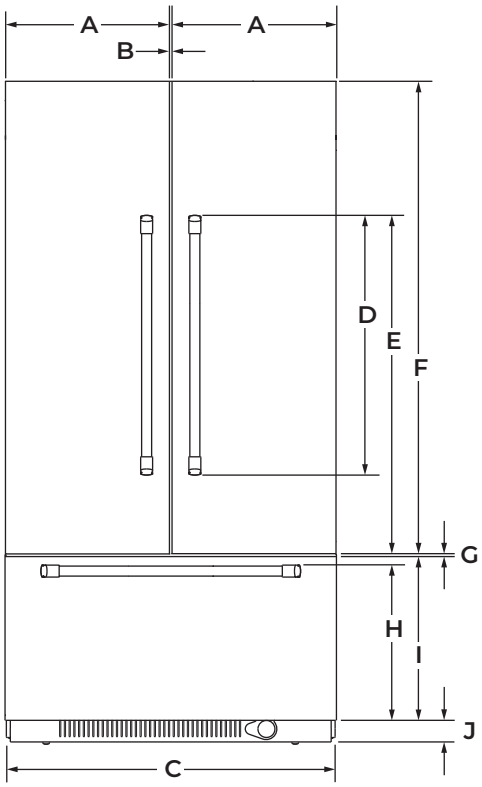


FRONT VIEW

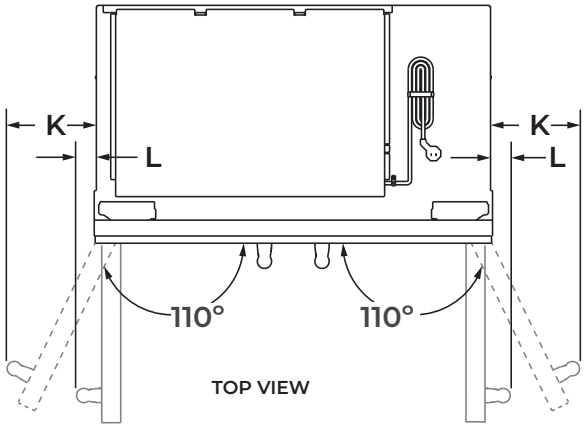


TOP VIEW

| DIMENSION | DESCRIPTION | JF42NXFXDE |
|---|---|---|
| A | Width of each door | 20 13/16" (52.9 cm) |
| B | Space between doors | 1/8" (0.3 cm) |
| C | Overall width (including vinyl side trims) | 41¾" (106 cm) |
| D | **Height of door handle** | |
| | RISE™ Stainless | 40⅞" (103.8 cm) |
| | NOIR™ Stainless | 40⅝" (103.2 cm) |
| E | **Height to top of door handle** | |
| | RISE™ Stainless | 49⅞" (126.6 cm) |
| | NOIR™ Stainless | 47 15/16" (121.8 cm) |
| F | Height of door | 59¼" (150.5 cm) |
| G | Space between door and drawer | 1/8" (0.3 cm) |
| H | **Height to top of drawer handle** | |
| | RISE™ Stainless | 19 5/16" (49.1 cm) |
| | NOIR™ Stainless | 19⅜" (49.2 cm) |
| I | Height of drawer | 20½" (52.1 cm) |
| J | Height of bottom grille | 3" (7.6 cm) |
| K | **Width from side of refrigerator to handle – door fully open 110°** | |
| | RISE™ Stainless | 8¼" (21 cm) |
| | NOIR™ Stainless | 7¾" (19.7 cm) |
| L | **Width from side of refrigerator to handle – door open 90°** | |
| | RISE™ Stainless | 2⅜" (6.1 cm) |
| | NOIR™ Stainless | 1⅝" (4.1 cm) |

Because Whirlpool Corporation policy includes a continuous commitment to improve our products, we reserve the right to change materials and specifications without notice.

Dimensions are for planning purposes only. For complete details, see Installation Instructions packed with product. Specifications subject to change without notice.

# 42" FULLY INTEGRATED BOTTOM FREEZER REFRIGERTORS

## DETAILED PLANNING DIMENSIONS GUIDE

**(BASE UNIT REQUIRES SUITE-COORDINATING FULL HEIGHT PANEL KIT OR CUSTOM PANELS AND HANDLES)**

**JF42NXFXDE – 41¾" (W) x 82⅞" (H) x 24" (depth without door panels/handles)**

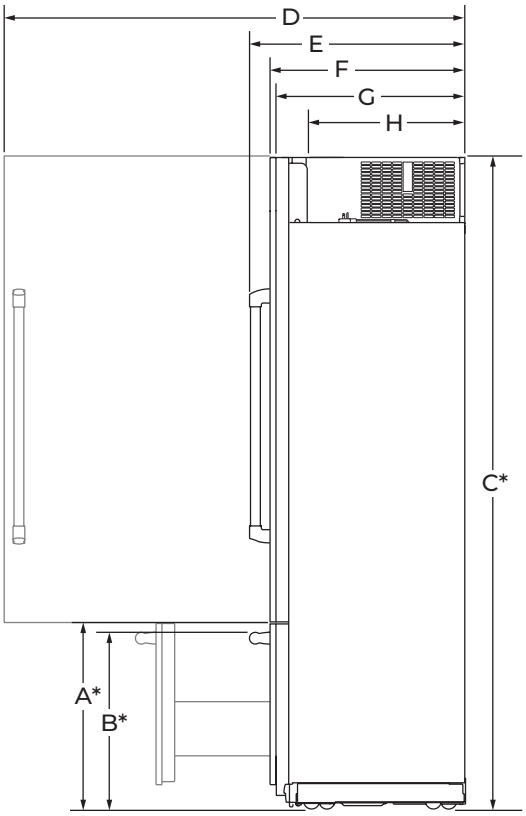


SIDE VIEW

| DIMENSION | DESCRIPTION | JF42NXFXDE |
|---|---|---|
| **A*** | Height to top of drawer (min.) | 23½" (59.7 cm) |
| **B*** | **Height to top of drawer handle (min.)** | |
| | RISE™ Stainless | 22 5/16" (56.7 cm) |
| | NOIR™ Stainless | 22⅜" (56.8 cm) |
| **C*** | Height to top of door (min.) | 82⅞" (210.5 cm) |
| **D** | Depth with door open 90° (min.) | 43¾" (111.1 cm) |
| **E** | **Depth with handle (min.)** | |
| | RISE™ Stainless | 27 11/16" (70.2 cm) |
| | NOIR™ Stainless | 26⅞" (68.2 cm) |
| **F** | **Depth with door (min.)** | |
| | RISE™ Stainless | 24¾" (62.9 cm) |
| | NOIR™ Stainless | 24¾" (62.9 cm) |
| | Custom panel (3/4"/1.9 cm) | 24¾" (62.9 cm) |
| **G** | Depth without door panel kit (min.) | 24" (61 cm) |
| **H** | Depth of compressor cover (min.) | 19⅞" (50.5 cm) |

*Add 1¼" (3.2 cm) to the height dimension when leveling legs are fully extended.

Because Whirlpool Corporation policy includes a continuous commitment to improve our products, we reserve the right to change materials and specifications without notice.

Dimensions are for planning purposes only. For complete details, see Installation Instructions packed with product. Specifications subject to change without notice.

# 42" FULLY INTEGRATED BOTTOM FREEZER REFRIGERTORS

## DETAILED PLANNING DIMENSIONS GUIDE

**(BASE UNIT REQUIRES SUITE-COORDINATING FULL HEIGHT PANEL KIT OR CUSTOM PANELS AND HANDLES)**

**JF42NXFXDE – 41¾" (W) x 82⅞" (H) x 24" (depth without door panels/handles)**

## AIRFLOW VENTING RECOMMENDATIONS

### CLOSED SOFFIT CABINET

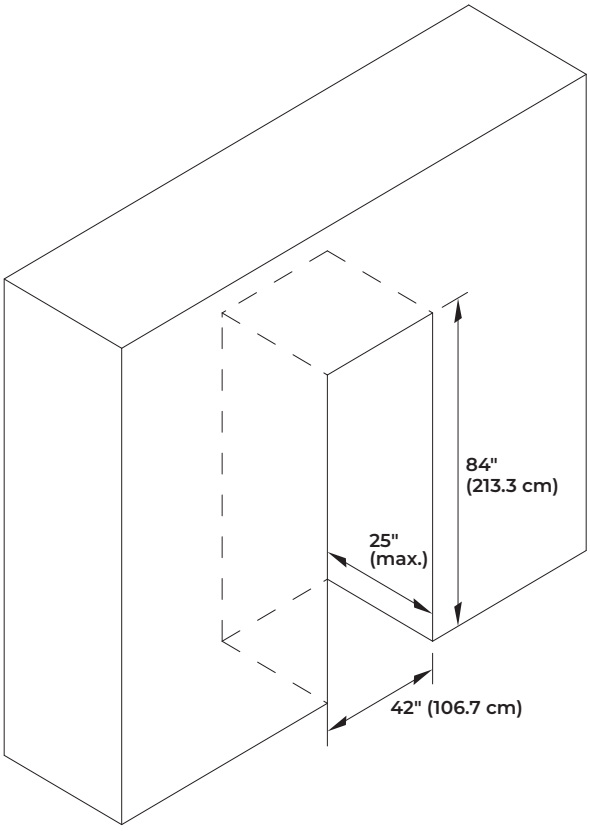


- Depth of cabinet must be less than 25" (63.5 cm).
- Height of soffit must not exceed 84" (213.3 cm).
- Following illustrations explain the cabinet construction (soffit and rear wall positions) required for optimum ventilation and airflow.

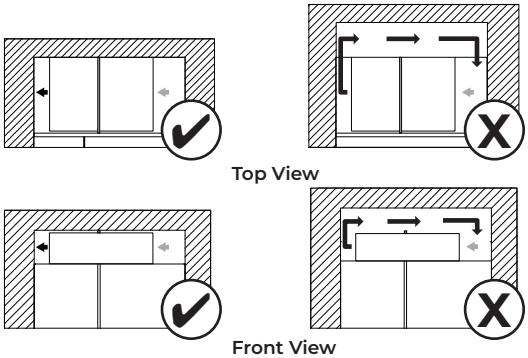

**Top View**

**Front View**

**Grey arrow = ambient air; Black arrow = warm air**

**Cabinet depth 25" and soffit located at 84", provides proper airflow/ventilation to the refrigerator. Efficient cooling is achieved.**

**Cabinet depth more than 25" and/or soffit located at more than 84", causes air gap at back and/or top of the refrigerator. Air gap allows warm air recirculation causing loss in cooling efficiency.**

- If your opening does not meet these requirements, you will need to make modifications.

Because Whirlpool Corporation policy includes a continuous commitment to improve our products, we reserve the right to change materials and specifications without notice.

Dimensions are for planning purposes only. For complete details, see Installation Instructions packed with product. Specifications subject to change without notice.

# 42" FULLY INTEGRATED BOTTOM FREEZER REFRIGERTORS

## DETAILED PLANNING DIMENSIONS GUIDE

**(BASE UNIT REQUIRES SUITE-COORDINATING FULL HEIGHT PANEL KIT OR CUSTOM PANELS AND HANDLES)**

**JF42NXFXDE – 41¾" (W) x 82⅞" (H) x 24" (depth without door panels/handles)**

## CLEARANCE DIMENSIONS

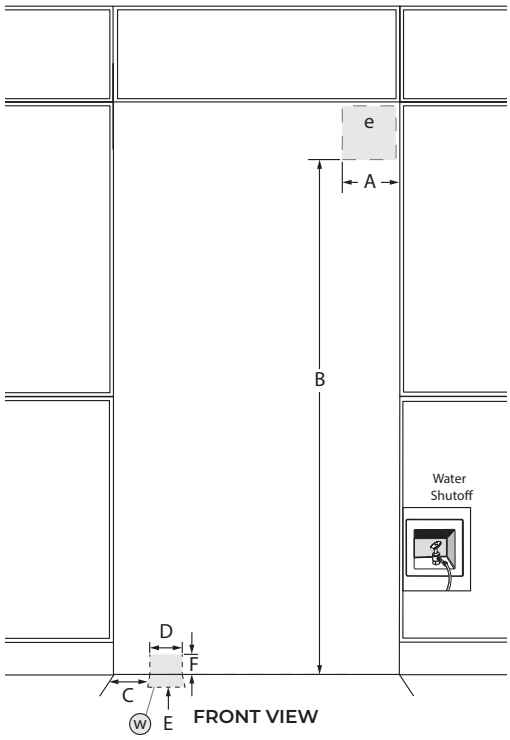


FRONT VIEW

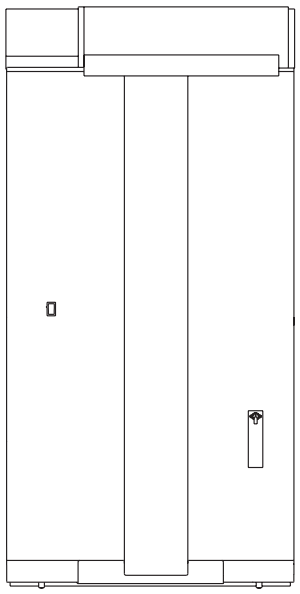

BACK VIEW

| DIMENSION | DESCRIPTION | JF42NXFXDE |
|---|---|---|
| **A** | Width of recommended electrical location | 7½" (19.1 cm) |
| **B** | Height to recommended electrical location | 77" (195.6 cm) |
| **C** | Distance from side of cabinet to recommended water connection location | 6½" (16.5 cm) |
| **D** | Width of recommended water connection location | 1½" (3.81 cm) |
| **E** | Depth of recommended water connection location (max.) | 2" (5 cm) |
| **F** | Height of recommended water connection location (behind the unit) | 2½" (6.35 cm) |
| ***e*** | Recommended electrical connection location | |
| ***w*** | Recommended water connection location | |

Because Whirlpool Corporation policy includes a continuous commitment to improve our products, we reserve the right to change materials and specifications without notice.

Dimensions are for planning purposes only. For complete details, see Installation Instructions packed with product. Specifications subject to change without notice.

## ELECTRICAL REQUIREMENTS

**⚠WARNING**



**Electrical Shock Hazard**

**Plug into a grounded 3 prong outlet.**

**Do not remove ground prong.**

**Do not use an adapter.**

**Do not use an extension cord.**

**Failure to follow these instructions can result in death, fire, or electrical shock.**

115 V, 60 Hz, AC only, 15 A or 20 A fused, grounded circuit is required. A dedicated circuit is recommended. Use an outlet that cannot be turned off by a switch. Do not use an extension cord.

## WATER PRESSURE REQUIREMENTS

A cold water supply with water pressure between 30 psi and 120 psi (207 kPa and 827 kPa) is required to operate the ice maker. Call a licensed, qualified plumber with any questions about the water pressure.

### Reverse Osmosis Water Supply

**IMPORTANT:** The pressure of the water coming out of a reverse osmosis system going to the water inlet valve of the refrigerator needs to be between 30 psi and 120 psi (207 kPa and 827 kPa).

If a reverse osmosis water filtration system is connected to the cold water supply, the water pressure to the reverse osmosis system needs to be a minimum of 40 psi to 60 psi (276 kPa to 414 kPa).

## LOCATION REQUIREMENTS

**⚠ WARNING**



**Explosion Hazard**

**Keep flammable materials and vapors, such as gasoline, away from refrigerator.**

**Failure to do so can result in death, explosion, or fire.**

Floor must be able to support refrigerator (more than 600 lb [272 kg]), door panels and contents of the refrigerator and must be at the same level as flooring in the room.


®/™ ©2020 JennAir. All rights reserved.