DIMENSION GUIDE

AMANA® 30" (76.2 cm) FREESTANDING ELECTRIC RANGE

PRODUCT MODEL NUMBERS: ACR4203MN*

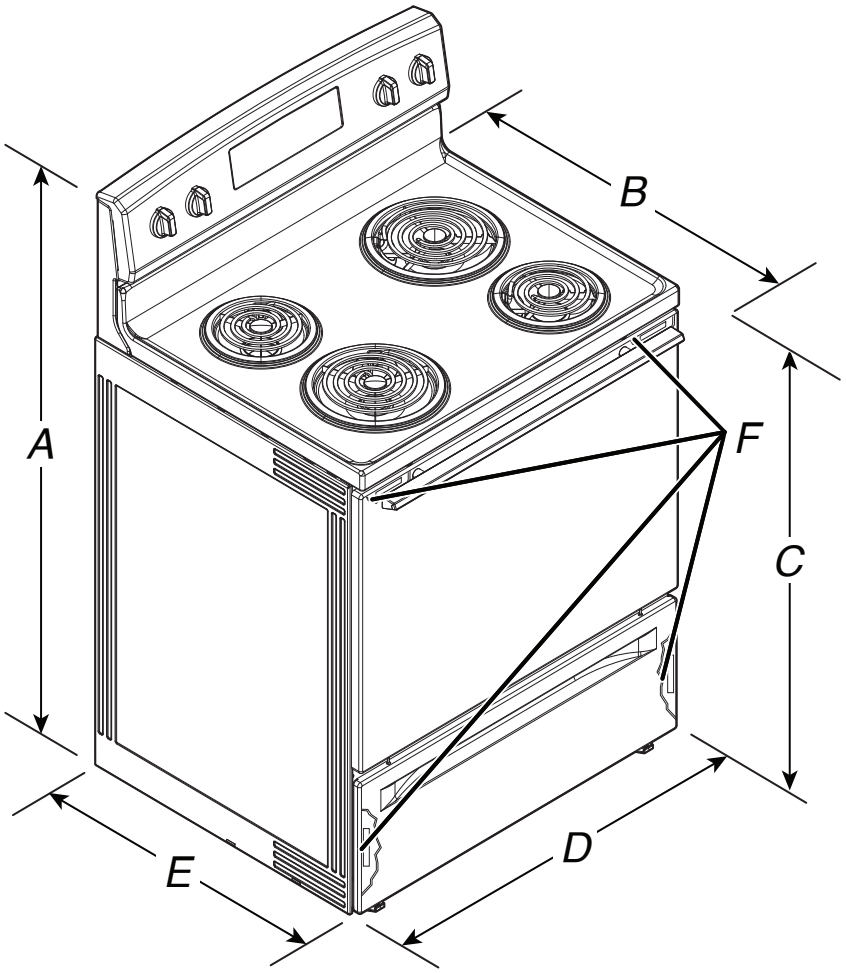

*A. 46 7/8" (119.1 cm) overall height (maximum) with leveling legs screwed all the way in**
B. 27¾" (70.5 cm) maximum depth with handle
*C. 36" (91.4 cm) cooktop height (maximum) with leveling legs screwed all the way in**
D. 29 7/8" (75.9 cm) width
*E. 25 5/16" (64.3 cm) depth – back of range to front of cooktop***
F. Model/serial rating plate (located on the left-side frame behind storage drawer or right side of frame behind the oven door)

IMPORTANT: Range must be level after installation. Follow the instructions in the “Level Range” section in the owner's manual. Using the cooktop as a reference for leveling the range is not recommended.
*Range can be raised approximately 1" (2.5 cm) by adjusting the leveling legs.
**Front of door and drawer may extend further forward depending on styling.

AMANA®

Because Whirlpool Corporation policy includes a continuous commitment to improve our products, we reserve the right to change materials and specifications without notice.

Dimensions are for planning purposes only. For complete details, see Installation Instructions packed with product. Specifications subject to change without notice.

W11670854A

Location Requirements

IMPORTANT: Observe all governing codes and ordinances**.**

- It is the installer's responsibility to comply with installation clearances specified on the model/serial/rating plate. The model/serial/rating plate is located on the frame behind a top corner of the door or either side of the drawer.

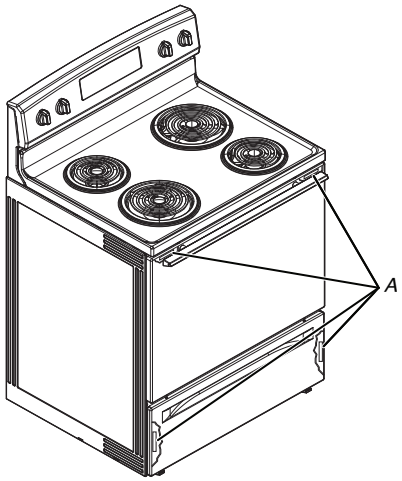

A. The model/serial/rating plate is located on the frame behind a top corner of the door or either side of the drawer

- To eliminate the risk of burns or fire by reaching over heated surface units, cabinet storage space located above the surface units should be avoided. If cabinet storage is to be provided, the risk can be reduced by installing a range hood that projects horizontally a minimum of 5" (12.7 cm) beyond the bottom of the cabinets.
- Cabinet opening dimensions that are shown must be used. Given dimensions are minimum clearances.
- The anti-tip bracket must be installed. To install the anti-tip bracket shipped with the range, see the "Install Anti-Tip Bracket" section in the Owner's Manual.
- Grounded electrical supply is required. See the appropriate "Electrical Requirements" section.

IMPORTANT: To avoid damage to your cabinets, check with your builder or cabinet supplier to make sure that the materials used will not discolor, delaminate or sustain other damage. This oven has been designed in accordance with the requirements of UL and CSA International and complies with the maximum allowable wood cabinet temperatures of 194°F (90°C).

Mobile Home - Additional Installation Requirements

The installation of this range must conform to the Manufactured Home Construction and Safety Standard, Title 24 CFR, Part 3280 (formerly the Federal Standard for Mobile Home Construction and Safety, Title 24, HUD Part 280). When such standard is not applicable, use the Standard for Manufactured Home Installations, ANSI A225.1/NFPA 501A or with local codes.

In Canada, the installation of this range must conform with the current standards CAN/CSA-Z240.1-latest edition, or with local codes.

Mobile home installations require:

- When this range is installed in a mobile home, it must be secured according to the instructions in this document.
- Four-wire power supply cord or cable must be used in a mobile home installation. The appliance wiring will need to be revised. See "Electrical Connection - U.S.A. Only" section in the Owner's Manual.

Cabinet Dimensions

Cabinet opening dimensions shown are for 25" (64.0 cm) countertop depth, 24" (61.0 cm) base cabinet depth and 36" (91.4 cm) countertop height.

IMPORTANT: If installing a range hood or microwave hood combination above the range, follow the range hood or microwave hood combination installation instructions for dimensional clearances above the cooktop surface.

A freestanding range may be installed next to combustible walls with zero clearance.

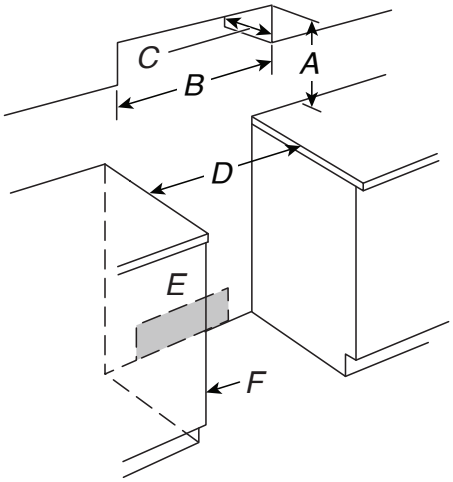

*A. For minimum clearance to top of cooktop, see NOTE**

B. 30" (76.2 cm) minimum opening width

C. 13" (33.0 cm) maximum upper cabinet depth

D. 30" (76.2 cm) minimum opening width

E. Outlet - 8" (20.3 cm) to 22" (55.9 cm) from either cabinet, 7" (17.8 cm) maximum from floor.

F. Cabinet door or hinges should not extend into the cutout.

***NOTE:** 24" (61.0 cm) minimum when bottom of wood or metal cabinet is covered by not less than 1/4" (0.64 cm) flame retardant millboard covered with not less than No. 28 MSG sheet steel, 0.015" (0.4 mm) stainless steel, 0.024" (0.6 mm) aluminum or 0.020" (0.5 mm) copper.

30" (76.2 cm) minimum clearance between the top of the cooking platform and the bottom of an uncovered wood or metal cabinet.

AMANA®

Because Whirlpool Corporation policy includes a continuous commitment to improve our products, we reserve the right to change materials and specifications without notice.

Dimensions are for planning purposes only. For complete details, see Installation Instructions packed with product. Specifications subject to change without notice.

Electrical Requirements - U.S.A. Only

⚠WARNING



Electrical Shock Hazard

Electrically ground appliance.

Failure to do so can result in death, fire, or electrical shock.

If codes permit and a separate ground wire is used, it is recommended that a qualified electrical installer determine that the ground path and wire gauge are in accordance with local codes.

Do not use an extension cord.

Be sure that the electrical connection and wire size are adequate and in conformance with the National Electrical Code, ANSI/NFPA 70-latest edition and all local codes and ordinances.

A copy of the above code standards can be obtained from:

National Fire Protection Association
1 Batterymarch Park
Quincy, MA 02169-7471

WARNING: Improper connection of the equipment-grounding conductor can result in a risk of electric shock. Check with a qualified electrician or service technician if you are in doubt as to whether the appliance is properly grounded. Do not modify the power supply cord plug. If it will not fit the outlet, have a proper outlet installed by a qualified electrician.

Electrical Connection

To properly install your range, you must determine the type of electrical connection you will be using and follow the instructions provided for it here.

- Range must be connected to the proper electrical voltage and frequency as specified on the model/serial/rating plate. The model/serial/rating plate is located on the frame behind a top corner of the door or either side of the drawer.

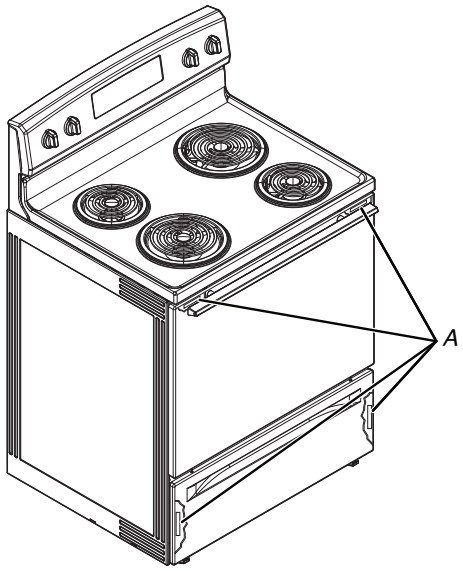

A. The model/serial/rating plate is located on the frame behind a top corner of the door or either side of the drawer.

- This range is manufactured with the neutral terminal connected to the cabinet. Use a 3-wire, UL listed, 40 or 50 A power supply cord (pigtail). See the following Range Rating chart. If local codes do not permit ground through the neutral, use a 4-wire power supply cord rated at 250 V, 40 or 50 A and investigated for use with ranges.

Range Rating*		Specified Rating of Power Supply Cord Kit and Circuit Protection
120/240 V	**120/208 V**	**Ampere**
8.8-16.5 kW	7.8-12.5 kW	40 or 50**
16.6-22.5 kW	12.6-18.5 kW	50

*The NEC calculated load is less than the total connected load listed on the model/serial/rating plate.
**If connecting to a 50 A circuit, use a 50 A rated cord with kit. For 50 A rated cord kits, use kits that specify use with a nominal 1⅜" (3.5 cm) diameter connection opening.

- A circuit breaker is recommended.
- The range can be connected directly to the circuit breaker box (or fused disconnect) through flexible or nonmetallic sheathed, copper or aluminum cable. See the “Electrical Connection - U.S.A. Only” section in the Owner's Manual.
- Allow 2 to 3 ft (61.0 cm to 91.4 cm) of slack in the line so that the range can be moved if servicing is ever necessary.
- A UL listed conduit connector must be provided at each end of the power supply cable (at the range and at the junction box).
- Wire sizes and connections must conform with the rating of the range.
- The Tech Sheet is located on the back of the range inside a clear plastic bag.

AMANA®

Because Whirlpool Corporation policy includes a continuous commitment to improve our products, we reserve the right to change materials and specifications without notice.

Dimensions are for planning purposes only. For complete details, see Installation Instructions packed with product. Specifications subject to change without notice.

If connecting to a 4-wire system:
This range is manufactured with the ground connected to the neutral by a link. The ground must be revised so the green ground wire of the 4-wire power supply cord is connected to the cabinet. See the “Electrical Connection - U.S.A. Only” section in the Owner's Manual.

Grounding through the neutral conductor is prohibited for new branch-circuit installations (1996 NEC); mobile homes; and recreational vehicles, or an area where local codes prohibit grounding through the neutral conductor.

When a 4-wire receptacle of NEMA Type 14-50R is used, a matching UL listed, 4-wire, 250 V, 40 or 50 A, range power supply cord (pigtail) must be used. This cord contains 4 copper conductors with ring terminals or open-end spade terminals with upturned ends, terminating in a NEMA Type 14-50P plug on the supply end.

The fourth (grounding) conductor must be identified by a green or green/yellow cover and the neutral conductor by a white cover. Cord should be Type SRD or SRDT with a UL listed strain relief and be at least 4 ft (1.22 m) long.

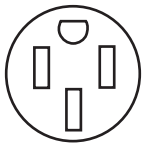

4-wire receptacle (14-50R)

The minimum conductor sized for the copper 4-wire power cord are:
40 A circuit
2 No.-8 conductors
1 No.-10 white neutral
1 No.-8 green grounding

If connecting to a 3-wire system:
Local codes may permit the use of a UL listed, 3-wire, 250 V, 40 or 50 A range power supply cord (pigtail). This cord contains 3 copper conductors with ring terminals or open-end spade terminals with upturned ends, terminating in a NEMA Type 10-50P plug on the supply end. Connectors on the appliance end must be provided at the point the power supply cord enters the appliance. This uses a 3-wire receptacle of NEMA Type 10-50R.

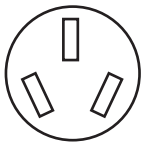

3-wire receptacle (10-50R)

AMANA®

Because Whirlpool Corporation policy includes a continuous commitment to improve our products, we reserve the right to change materials and specifications without notice.

Dimensions are for planning purposes only. For complete details, see Installation Instructions packed with product. Specifications subject to change without notice.

®/™ ©2023 Amana. All rights reserved.