PCWK22U1WBB

GE Profile™ Series 2.2 Cu. Ft. Built-In Sensor Microwave Oven

DIMENSIONS AND INSTALLATION INFORMATION (IN INCHES)

EXTERIOR DIMENSIONS (IN INCHES)	
W x H x D	24 1/4" x 13 5/8" x 20"

ACCESSORY TRIM KITS FOR GE MICROWAVE OVENS (AVAILABLE AT ADDITIONAL COST)

For a custom built-in appearance, these kits allow built-in installation of the microwave oven into a wall or cabinet alone and are U.L. approved for installation over a GE single electric wall oven. These kits should not be installed over a gas wall oven.

NOTE: 120V, 60-cycle, grounded power receptacle location optional on back within cabinet opening.

COLOR	TRIM KIT	SIZE	Z	MAX. HEIGHT
Black	JX7227DLBB	27"	26 7/8"	18 7/8"
Black	JX7230DLBB	30"	29 3/4"	18 7/8"

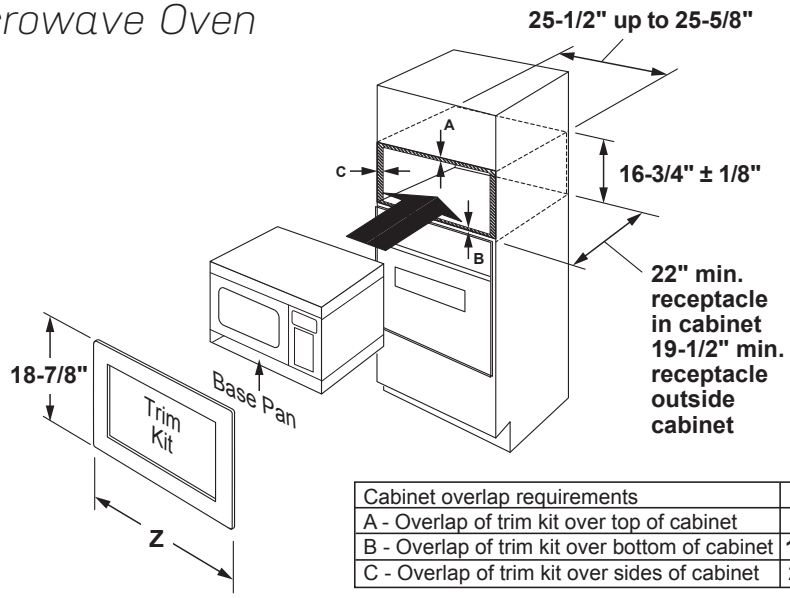

Cabinet overlap requirements	30"	27"
A - Overlap of trim kit over top of cabinet	1"	1"
B - Overlap of trim kit over bottom of cabinet	1-1/8"	1-1/8"
C - Overlap of trim kit over sides of cabinet	2-1/8"	5/8"

NOTE: Allow an additional inch of clearance beyond trim kit frame on all sides to prevent the trim kit from blocking any outside adjoining cabinets/obstructions. Reference below drawing.

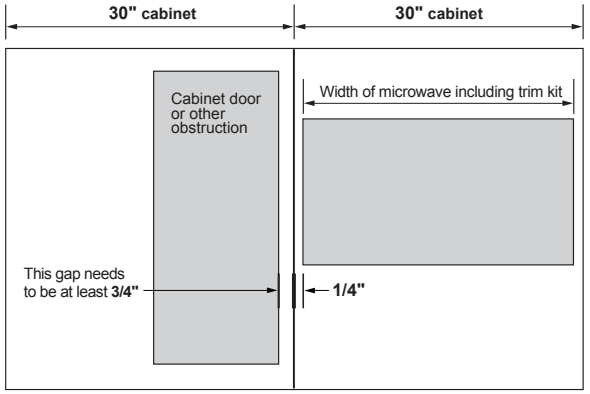

INSTALLATION INFORMATION: This information is not intended to be used for installing unit described. Before installing, consult installation instructions packed with product/kit for current dimensional data. For ADA compliance, the microwave must be installed no higher than 36 1/4".

ADA COMPLIANT

Listed by Underwriters Laboratories

GE APPLIANCES

For answers to your Monogram, GE Café™ Series, GE Profile™ Series or GE Appliances product questions, visit our website at geappliances.com or call GE Answer Center® Service, 800.626.2000.

Specification Revised 10/25

PCWK22U1WBB

GE Profile™ Series 2.2 Cu. Ft. Built-In Sensor Microwave Oven

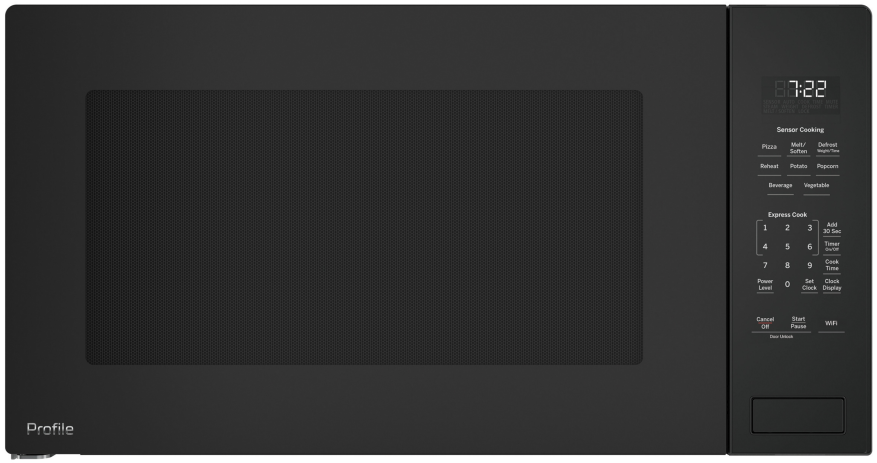

FEATURES AND BENEFITS

Built-in microwave – This countertop microwave is built-in capable with a sleek matching trim kit

Glass touch controls -- Features a smooth glass design that is easy to operate and easy to clean

Scan-to-Cook Technology -- Effortlessly prepare your favorite frozen meals exactly as intended by the manufacturer—just scan the barcode, and let your microwave handle the rest.

WiFi Connect -- Seamlessly manage your GE Profile microwave's power, cook time, and timers from your smartphone, tablet, or voice control device for ultimate convenience.

Sensor cooking controls -- Automatically adjusts time and power for delicious cooking results

Weight and time defrost – Simply enter the weight of the food, and the oven automatically sets the optimal defrosting time and power level or set your desired time for defrosting

Extra-large 16.5" turntable – Rotates food throughout the cycle and accommodates large cookware

Two-Step Child Lock - This mandatory feature helps prevent unintended use by younger family members, with the option to deactivate it if not needed.

Add 30 seconds button – Add 30 second increments of microwave cooking time

Kitchen timer – Minute timer helps keep you on track

Model PCWK22U1WDD – Gray
Model PCWK22U1WWW – White
Model PCWK22U1WBB – Black

GE APPLIANCES

For answers to your Monogram, GE Café™ Series, GE Profile™ Series or GE Appliances product questions, visit our website at geappliances.com or call GE Answer Center® Service, 800.626.2000.

Listed by Underwriters Laboratories

Specification Revised 10/25