24" DESIGNER UNDERCOUNTER REFRIGERATOR/FREEZER WITH ICE MAKER – PANEL READY

DEU2450CI

FEATURES

Fully customizable exterior—accepts custom panels for an integrated look within cabinetry or stainless-steel accessory panels and handles to coordinate with other Sub-Zero, Wolf, and Cove appliances

Seamlessly integrating anywhere, undercounter refrigeration adds comfort to your master suite, creates a corner for libations in the study—the options are endless

On-door shelf easily accommodates a wide variety of condiments and beverages, with ample room for larger two-liter bottles

Stores fresh ice in a removable freezer storage bin, and yields extra cubes with Max Ice Mode

Intuitive, on-door touch control panel offers ergonomic, convenient access to settings

Cleanup is simple with nano-coated, spillproof shelf

Offers precise temperature control within one degree of setpoint, preserving dairy, produce, craft beer, and other perishables at their optimal temperature

Soft-on LED lighting fully illuminates the interior when the door is open

Our convenient Owner's App allows you to adjust temperatures and Max Ice Mode, be notified of a door left ajar, or receive remote service diagnostics

ACCESSORIES

Custom Panel Lock Kit

Dual Install Kit - Handle-to-Drawer

Dual Install Kit - Handle-to-Handle

Outdoor Stainless Steel Solid Door Panel With Lock - Pro Handle, Left Hinge

Outdoor Stainless Steel Solid Door Panel With Lock - Pro Handle, Right Hinge

Pro Handle

Tubular Handle

Stainless Steel Solid Door Panels

Stainless Steel Dual Kickplates

Accessories are available through an authorized dealer.
For local dealer information, visit subzero-wolf.com/locator.



HANDLE ACCESSORIES

PRO



TUBULAR



PRODUCT DETAILS

REFRIGERATOR

- One stationary and one adjustable shelf
- One on-door shelf

FREEZER

- Removable ice storage bin

24" DESIGNER UNDERCOUNTER REFRIGERATOR/FREEZER WITH ICE MAKER – PANEL READY

PRODUCT SPECIFICATIONS

Model	DEU2450CI
Dimensions	24"W x 34 1/2"H x 23 1/8"D
Refrigerator Capacity	3.0 cu. ft.
Freezer Capacity	1.7 cu. ft.
Weight	134 lbs
Electrical Supply	115 VAC, 60 Hz
Electrical Service	15 amp dedicated circuit
Plumbing Supply	1/4" OD copper, braided stainless steel or PEX tubing
Plumbing Pressure	35-120 psi
Receptacle	3-prong grounding-type

ELECTRICAL

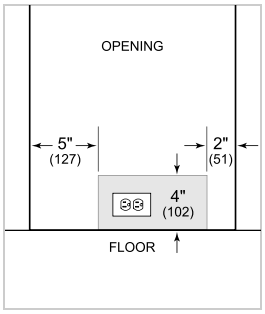

PLUMBING

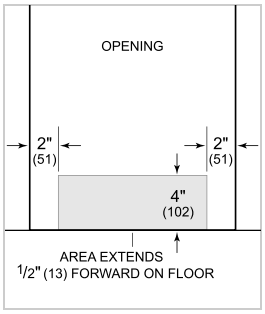

NOTE: The electrical outlet must be positioned with the grounding prong to the right of the thinner blades.

PANEL SPECIFICATIONS For complete panels specifications including width/height, weight requirements and thickness requirements visit subzero-wolf.com/reveal.

NOTE: Dimensions in parenthesis are in millimeters unless otherwise specified

INTERIOR VIEW

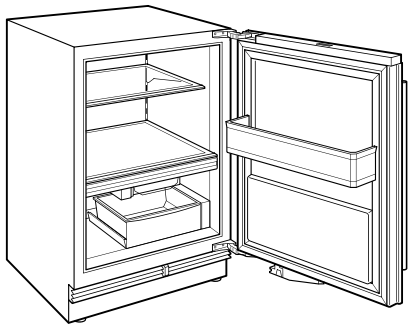

This illustration is intended for interior reference only and may not represent the exterior of the model being specified.

DIMENSIONS

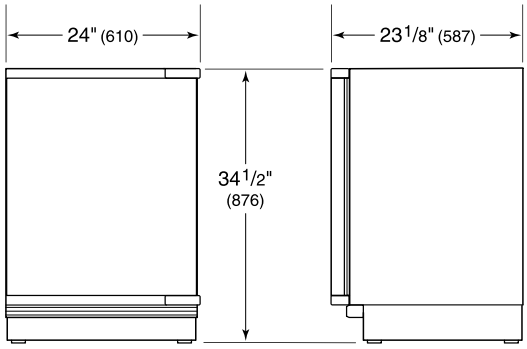

HEIGHT DIMENSIONS ± 1/2" (13)

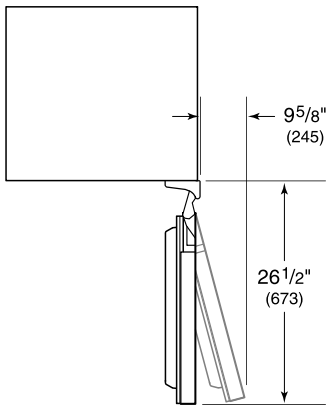

STANDARD INSTALLATION

