MLG31PCB

Phase 7 Coin

Installation Manual

WARNING: For your safety the information in this manual must be followed to minimize the risk of fire or explosion or to prevent property damage, personal injury or death.

— Do not store or use gasoline or other flammable vapors and liquids in the vicinity of this or any other appliance.

— WHAT TO DO IF YOU SMELL GAS:

- Do not try to light any appliance.
- Do not touch any electrical switch; do not use any phone in your building.
- Clear the room, building or area of all occupants.
- Immediately call your gas supplier from a neighbor's phone. Follow the gas supplier's instructions.
- If you cannot reach your gas supplier, call the fire department.

— Installation and service must be performed by a qualified installer, service agency or the gas supplier.

AVERTISSEMENT: Assurez-vous de bien suivre les instructions données dans cette notice pour réduire au minimum le risque d'incendie ou d'explosion ou pour éviter tout dommage matériel, toute blessure ou la mort.

— Ne pas entreposer ni utiliser d'essence ni d'autres vapeurs ou liquides inflammables à proximité de cet appareil ou de tout autre appareil.

— QUE FAIRE SI VOUS SENTEZ UNE ODEUR DE GAZ:

- Ne pas tenter d'allumer d'appareils.
- Ne touchez à aucun interrupteur. Ne pas vous servir des téléphones se trouvant dans le bâtiment.
- Évacuez la pièce, le bâtiment ou la zone.
- Appelez immédiatement votre fournisseur de gaz depuis un voisin. Suivez les instructions du fournisseur.
- Si vous ne pouvez rejoindre le fournisseur de gaz, appelez le service des incendies.

— L'installation et l'entretien doivent être assurés par un installateur ou un service d'entretien qualifié ou par le fournisseur de gaz.

MAYTAG®

RETAIN THESE INSTRUCTIONS IN A SAFE PLACE FOR FUTURE REFERENCE

073003MGOLDSTEIN/tcosta

Part No. 113203

Retain This Manual In A Safe Place For Future Reference

This product embodies advanced concepts in engineering, design, and safety. If this product is properly maintained, it will provide many years of safe, efficient, and trouble-free operation.

ONLY qualified technicians should service this equipment.

OBSERVE ALL SAFETY PRECAUTIONS displayed on the equipment or specified in the installation manual included with the dryer.

The following "**FOR YOUR SAFETY**" caution **must be** posted near the dryer in a prominent location.

FOR YOUR SAFETY	POUR VOTRE SÉCURITÉ
Do not store or use gasoline or other flammable vapors and liquids in the vicinity of this or any other appliance.	Ne pas entreposer ni utiliser d'essence ni d'autres vapeurs ou liquides inflammables à proximité de cet appareil ou de tout autre appareil.

We have tried to make this manual as complete as possible and hope you will find it useful. **The manufacturer** reserves the right to make changes from time to time, without notice or obligation, in prices, specifications, colors, and material, and to change or discontinue models. The illustrations included in this manual may not depict your particular dryer **exactly**.

Important

For your convenience, log the following information:

DATE OF PURCHASE _____ **MODEL NO.** **MLG31PCB**

DISTRIBUTOR'S NAME _____

Serial Number(s) _____

_____

_____

For replacement parts, contact the distributor from which the dryer was purchased or contact:

Maytag Co.
403 West Fourth Street North
Newton, Iowa 50208
(641) 787-7000

"IMPORTANT NOTE TO PURCHASER"

Information **must be** obtained from your local gas supplier on the instructions to be followed if the user smells gas. These instructions **must be** posted in a prominent location near the dryer.

IMPORTANT

YOU MUST DISCONNECT AND LOCK OUT THE ELECTRIC SUPPLY AND THE GAS SUPPLY OR THE STEAM SUPPLY BEFORE ANY COVERS OR GUARDS ARE REMOVED FROM THE MACHINE TO ALLOW ACCESS FOR CLEANING, ADJUSTING, INSTALLATION, OR TESTING OF ANY EQUIPMENT PER OSHA (Occupational Safety and Health Administration) **STANDARDS.**

"Caution: Label all wires prior to disconnection when servicing controls. Wiring errors can cause improper operation."

«Attention: Au moment de l'entretien des commandes, étiquetez tous les fils avant de les débrancher. Des erreurs de câblage peuvent entraîner un fonctionnement inadéquat et dangereux.»

CAUTION

DRYERS SHOULD NEVER BE LEFT UNATTENDED WHILE IN OPERATION.

WARNING

CHILDREN SHOULD NOT BE ALLOWED TO PLAY ON OR NEAR THE DRYER(S).

CHILDREN SHOULD BE SUPERVISED IF NEAR DRYERS IN OPERATION.

FOR YOUR SAFETY

DO NOT DRY MOP HEADS IN THE DRYER.

DO NOT USE DRYER IN THE PRESENCE OF DRY CLEANING FUMES.

WARNING

UNDER NO CIRCUMSTANCES should the dryer door switch, lint drawer switch, or heat safety circuit ever be disabled.

WARNING

The dryer *must never be* operated with any of the back guards, outer tops, or service panels removed. PERSONAL INJURY OR FIRE COULD RESULT.

WARNING

DRYER *MUST NEVER BE* OPERATED WITHOUT THE LINT FILTER/SCREEN IN PLACE, EVEN IF AN EXTERNAL LINT COLLECTION SYSTEM IS USED.

IMPORTANT

PLEASE OBSERVE ALL SAFETY PRECAUTIONS displayed on the equipment and/or specified in the installation manual included with the dryer.

Dryer ***must not be*** installed or stored in an area where it **will be** exposed to water or weather.

The wiring diagram for the dryer is located in the front electrical control box area.

IMPORTANT

Dryer *must be* installed in a location/environment, which the ambient temperature remains between 40° F (4.44° C) and 130° F (54.44° C).

Table of Contents

SECTION I
SAFETY PRECAUTIONS 3

SECTION II
SPECIFICATIONS 5

SECTION III
INSTALLATION PROCEDURES 7
A. Unpacking/Setting Up 7
B. Location of the Dryer 7
C. Dryer Enclosure Requirements 9
D. Fresh Air Supply Requirements 10
E. Exhaust Requirements 11
F. Electrical Information 18
G. Gas Information 20
H. Preparation For Operation 25
I. Preoperational Tests 25
J. Shutdown Instructions 28

SECTION IV
OPERATING INSTRUCTIONS 29
A. Coin Mode 29
B. Free Mode 30
C. Pause Mode 30
D. RPM 30
E. Clearing Credit/Clearing Cycle 31
F. Accessing Coin Vault 31
G. Wrinkle Guard 31

SECTION V
SERVICE/PARTS INFORMATION 32
A. Service 32
B. Parts 32

SECTION VI
WARRANTY INFORMATION 33
A. Returning Warranty Cards 33
B. Warranty 33

SECTION VII
ROUTINE MAINTENANCE 34
A. Cleaning 34
B. Adjustments 35
C. Lubrication 35

SECTION VIII
DATA LABEL INFORMATION 36

SECTION IX
PROCEDURE FOR FUNCTIONAL CHECK OF REPLACEMENT COMPONENTS 38

SECTION I

SAFETY PRECAUTIONS

WARNING: For your safety, the information in this manual ***must be*** followed to minimize the risk of fire or explosion or to prevent property damage, personal injury, or loss of life.

WARNING: The dryer *must never be* operated with any of the back guards, outer tops, or service panels removed. PERSONAL INJURY OR FIRE COULD RESULT.

1. **DO NOT** store or use gasoline or other flammable vapors and liquids in the vicinity of this or any other appliance.

2. Purchaser/user should consult the local gas supplier for proper instructions to be followed in the event the user smells gas. The instructions **should be** posted in a prominent location.

3. WHAT TO DO IF YOU SMELL GAS:

   a. **DO NOT** try to light any appliance.

   b. **DO NOT** touch any electrical switch.

   c. **DO NOT** use any phone in your building.

   d. Clear the room, building, or area of **ALL** occupants.

   e. Immediately call your gas supplier from a neighbor's phone. Follow the gas supplier's instructions.

   f. If you **cannot** reach your gas supplier, call the fire department.

4. Installation and service **must be** performed by a qualified installer, service agency, or gas supplier.

5. Dryer(s) **must be** exhausted to the outdoors.

6. Although **Maytag** produces a very versatile dryer, there are some articles that, due to fabric composition or cleaning method, **should not be** dried in it.

WARNING: Dry only water washed fabrics. ***DO NOT*** dry articles spotted or washed in dry cleaning solvents, a combustible detergent, or "all purpose" cleaner.
EXPLOSION COULD RESULT.

WARNING: ***DO NOT*** dry rags or articles coated or contaminated with gasoline, kerosene, oil, paint, or wax.
EXPLOSION COULD RESULT.

WARNING: ***DO NOT*** dry mop heads. Contamination by wax or flammable solvents will create a fire hazard.

WARNING: ***DO NOT*** use heat for drying articles that contain plastic, foam, sponge rubber, or similarly textured rubber materials. Drying in a heated basket (tumbler) may damage plastics or rubber and may be a fire hazard.

7. A program **should be** established for the inspection and cleaning of lint in the heating unit area, exhaust ductwork, and inside the dryer. The frequency of inspection and cleaning can best be determined from experience at each location.

WARNING: The collection of lint in the burner area and exhaust ductwork can create a potential fire hazard.

8. For personal safety, the dryer **must be** electrically grounded in accordance with local codes and/or the National Electrical Code ANSI/NFPA NO. 70-LATEST EDITION or in Canada, the Canadian Electrical Codes Parts 1 & 2 CSA C22.1-1990 or LATEST EDITION.

NOTE: Failure to electrically ground the dryer properly will VOID THE WARRANTY.

9. **UNDER NO CIRCUMSTANCES** should the dryer door switch, lint drawer switch, or heat safety circuit ever be disabled.

WARNING: **PERSONAL INJURY OR FIRE COULD RESULT** should the dryer door switch, lint drawer switch, or heat safety circuit ever be disabled.

10. This dryer is not to be used in the presence of dry cleaning solvents or fumes.

11. Remove articles from the dryer as soon as the drying cycle has been completed.

WARNING: Articles left in the dryer after the drying and cooling cycles have been completed can create a fire hazard.

12. **READ AND FOLLOW ALL CAUTION AND DIRECTION LABELS ATTACHED TO THE DRYER.**

13. For safety, proper operation, and optimum performance, the dryer **must not be** operated with a load less than sixty-six percent (66%), 20 pounds (9.1 kg) of its rated capacity.

WARNING: **YOU MUST DISCONNECT AND LOCK OUT THE ELECTRIC SUPPLY AND THE GAS SUPPLY BEFORE ANY COVERS OR GUARDS ARE REMOVED FROM THE MACHINE TO ALLOW ACCESS FOR CLEANING, ADJUSTING, INSTALLATION, OR TESTING OF ANY EQUIPMENT PER OSHA** (Occupational Safety and Health Administration) **STANDARD.**

IMPORTANT: **Dryer *must be* installed in a location/environment, which the ambient temperature remains between 40° F (4.44° C) and 130° F (54.44° C).**

SECTION II

SPECIFICATIONS

MAXIMUM CAPACITY (TOTAL DRY WEIGHT)		60 lbs	**27.2 kg**
BASKET (TUMBLER) DIAMETER		27-1/4”	**69.22 cm**
BASKET (TUMBLER) DEPTH		30”	**76.2 cm**
BASKET (TUMBLER) VOLUME (PER BASKET)		10.1 cu ft	**0.286 cu m**
BASKET (TUMBLER) MOTOR (2 PLACES)		1/3 hp	**0.279 kW**
DOOR OPENING – DIAMETER (2 PLACES)		21-1/2”	**54.61 cm**
Gas	VOLTAGE AVAILABLE	115v 1ø 2w 60 Hz	
	APPROX. WEIGHT (UNCRATED)	793 lbs	**359.7 kg**
	APPROX. WEIGHT (CRATED)	860 lbs	**390.1 kg**
	HEAT INPUT (TOTAL FOR BOTH BASKETS)	136,000 Btu/hr	**34,272 kcal/hr**
	AIRFLOW (PER BASKET/TUMBLER)	400 cfm	**11.3 cmm**
	GAS INLET SIZE (2 PLACES)	1/2” F.N.P.T.	

Shaded areas are stated in metric equivalents 1/15/04

NOTE: Manufacturer reserves the right to make changes in specifications at any time without notice or obligation.

SPECIFICATIONS – GAS ONLY

DRYER NOTES:

° DUCTWORK SIZE VARIES WITH INSTALLATION CONDITIONS.
° EXHAUST STATIC PRESSURE MUST BE NO LESS THAN 0 AND MUST NOT EXCEED 0.3" (0.74 MB) WATER COLUMN.

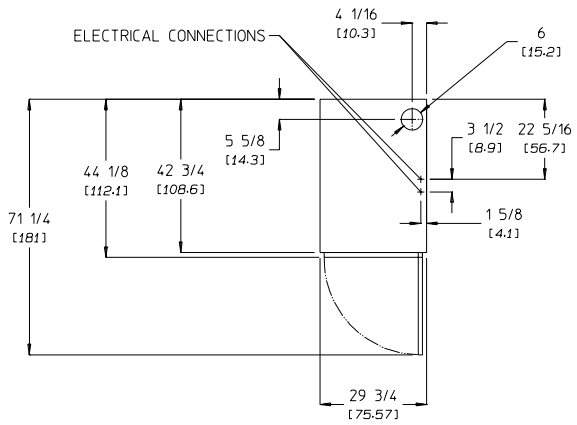

PLAN VIEW

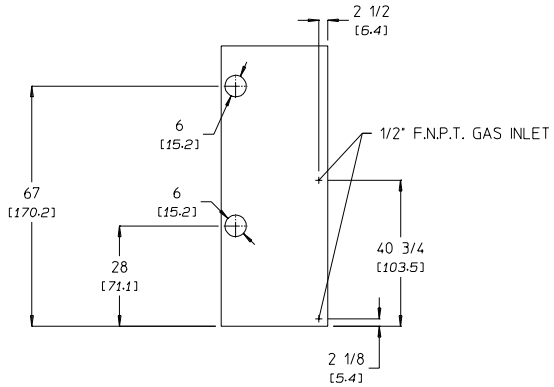

REAR VIEW (GAS AND ELECTRIC)

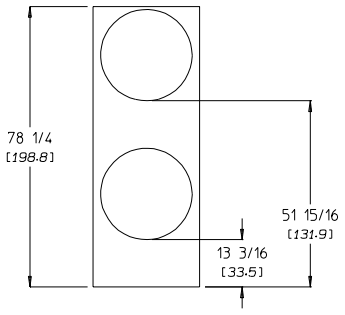

FRONT VIEW

EV 7/22/03

NOTE: Manufacturer reserves the right to make changes in specifications at any time without notice or obligation.

SECTION III
INSTALLATION PROCEDURES

Installation **should be** performed by competent technicians in accordance with local and state codes. In the absence of these codes, the installation **must conform** to applicable American National Standards: ANSI Z223.1-LATEST EDITION (National Fuel Gas Code) or ANSI/NFPA NO. 70-LATEST EDITION (National Electrical Code) or in Canada, the installation **must conform** to applicable Canadian Standards: CAN/CGA-B149.1-M91 (Natural Gas) or CAN/CGA-B149.2-M91 (Liquid Propane [L.P.] Gas) or LATEST EDITION (for General Installation and Gas Plumbing) or Canadian Electrical Codes Parts 1 & 2 CSA C22.1-1990 or LATEST EDITION (for Electrical Connections).

A. UNPACKING/SETTING UP

Remove protective shipping material (i.e., plastic wrap and/or optional shipping box) from dryer.

NOTE: The access keys for the service doors are included in the information packet shipped in the basket (tumbler). These keys ***should be*** removed and put in a safe place yet made accessible because some **will be** needed throughout various phases in the installation of the dryer.

Dryers are shipped with a coin box and coin box faceplate ONLY. The coin box lock is not included and **must be** purchased elsewhere or the lock can be ordered as a parts order from the manufacturer.

The dryer can be moved to its final location while still attached to the skid or with the skid removed. To unskid the dryer, locate and remove the four (4) bolts securing the base of the dryer to the wooden skid. Two (2) are at the rear of the base, and two (2) are located in the front. Once the bolts are removed, slide the dryer off the skid.

With the skid removed, to make it easier to slide the dryer into its final position, slightly lower **ALL** four (4) leveling legs, so that the dryer will slide on the legs instead of the base frame. The dryer is equipped with four (4) leveling legs, one (1) at each corner of the dryer base. The hex head adjustment bolts for the two (2) front leveling legs are located directly behind the lower access door, and the rear two (2) adjustments are directly behind the lower rear back (guard) panel.

To facilitate door closure and better tumbling action (and improved efficiency), the dryer **should be** tilted slightly to the rear.

B. LOCATION OF THE DRYER

Before installing the dryer, be sure the location conforms to local codes and ordinances. In the absence of such codes or ordinances the location **must conform** with the National Fuel Gas Code ANSI.Z223.1-LATEST EDITION, or in Canada, the Canadian Installation Codes CAN/CGA-B149.1-M91 (Natural Gas) or CAN/CGA-B149.2-M91 (L.P. Gas) or LATEST EDITION.

1. The dryer **must be** installed on a sound level floor capable of supporting its weight. Carpeting **must be** removed from the floor area that the dryer is to rest on.

IMPORTANT: "The dryer ***must be*** installed on noncombustible floors only."

2. The dryer **must not be** installed or stored in an area where it will be exposed to water or weather.

3. The dryer is for use in noncombustible locations.

4. Provisions for adequate air supply **must be** provided as noted in this manual (refer to **Fresh Air Supply Requirements** in **Section D**).

5. Clearance provisions **must be** made from noncombustible construction as noted in this manual (refer to **Dryer Enclosure Requirements** in **Section C**).

   Even though a 12-inch (30.48 cm) clearance is acceptable, it is recommended that the rear of the dryer be positioned approximately 2 feet (0.61 meters) away from the nearest obstruction, i.e., wall, for ease of installation, maintenance, and service. (Refer to the **illustration below**.)

6. Provisions **must be** made for adequate clearances for servicing and for operation as noted in this manual (refer to **Dryer Enclosure Requirements** in **Section C**).

7. Dryer **must be** exhausted to the outdoors in an area where correct exhaust venting can be achieved as noted in this manual (refer to **Exhaust Requirements** in **Section E**).

IMPORTANT: Dryer *must be* installed in a location/environment, which the ambient temperature remains between 40° F (4.44° C) and 130° F (54.44° C).

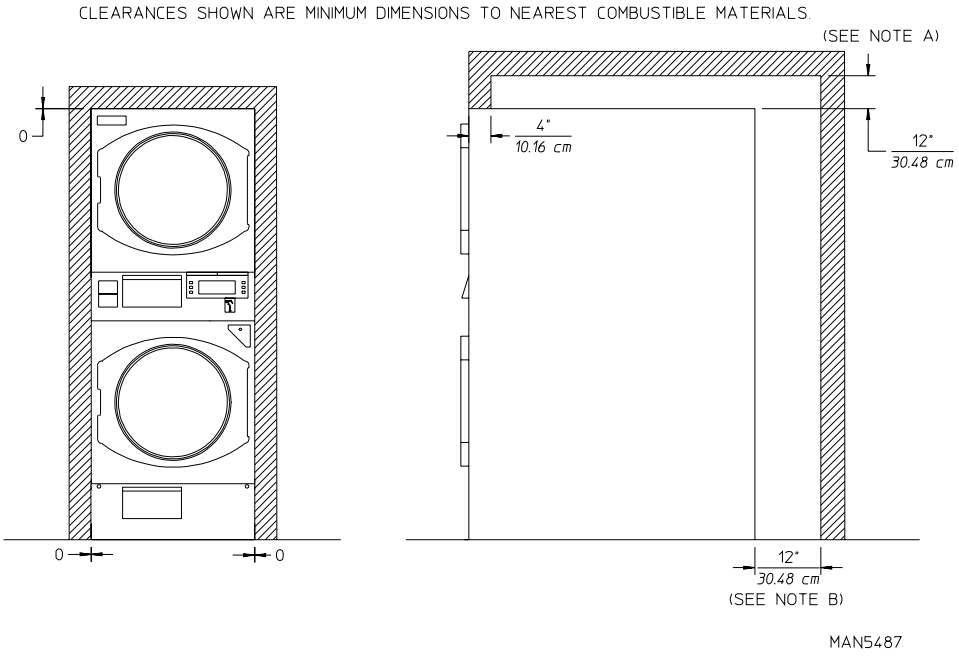

NOTES:

A. MINIMUM OF 12" (30.48 cm) CLEARANCE IS ACCEPTABLE FOR EASE OF INSTALLATION AND SERVICE (POWER CONNECTIONS). AT LEAST 18" (45.72 cm) IS RECOMMENDED.

B. MINIMUM OF 12" (30.48 cm) CLEARANCE IS ACCEPTABLE FOR EASE OF INSTALLATION, MAINTANCE AND SERVICE. AT LEAST 24" (60.96 cm) IS RECOMMENDED.

GS 10/20/00

8. Dryer **must be** located in an area where correct exhaust venting can be achieved as noted in this manual (refer to **Exhaust Requirements** in **Section E**).

IMPORTANT: Dryer ***should be*** located where a minimum amount of exhaust duct **will be** necessary.

9. The dryer **must be** installed with a proper exhaust duct connection to the outside.

10. The dryer **must be** installed with provisions for adequate combustion and make-up air supply.

CAUTION: This dryer produces combustible lint and ***must be*** exhausted to the outdoors. Every 6 months, inspect the exhaust ducting and remove any lint build up.

C. DRYER ENCLOSURE REQUIREMENTS

Bulkheads and partitions **should be** made of noncombustible materials and **must be** located a minimum of 12-inches (30.48 cm [18-inches [45.72 cm] or more is recommended for ease of installation, maintenance, and service]) above the dryer's outer top, except along the front of the dryer which may be closed in if desired.

NOTE: Even though a minimum of 12-inches (30.48 cm) above the dryer's outer top is acceptable, a clearance of 18-inches (45.72 cm) or more is suggested for ease of installation and service (electrical power connections).

NOTE: When fire sprinkler systems are located above the dryers, a minimum of 12-inches (30.48 cm) above the dryer's outer top **is required**.

NOTE: Allowances ***must be*** made for the opening of the control door.

Dryers may be positioned sidewall to sidewall. However, allowances **must be** made for the opening and closing of the control door and the lint door. It is suggested that the dryer be positioned about 2 feet (0.61 meters) away from the nearest obstruction for ease of installation, maintenance, and service (to be measured from the back guard). Refer to the **illustration** on the previous page for details.

NOTE: Air considerations are important for proper and efficient operation.

D. FRESH AIR SUPPLY REQUIREMENTS

Air supply (make-up air) **must be** given careful consideration to ensure proper performance of each dryer. An unrestricted source of 800 cfm (22.65 cmm) is necessary for each dryer. An unrestricted air entrance from the outdoors (atmosphere) of a minimum of 1-1/2 square feet (0.14 square meters) is required for each dryer. This area **must be** enlarged if louvers or registers cover the opening. It is not necessary to have a separate make-up air opening for each dryer. Common make-up air openings are acceptable. However, they **must be** set up in such a manner that the make-up air is distributed equally to the dryers. For example, for a bank of eight (8) dryers, a total make-up air opening of 12 square feet (1.15 square meters) is required. Two (2) openings measuring 2 feet by 3 feet (0.61 meters by 0.91 meters [6 square feet] [0.56 square meters]) are acceptable. The dryer **must be** installed with provisions for adequate combustion and make-up air supply.

Allowances **must be** made for remote or constricting passageways or where dryers are located at excessive altitudes or predominantly low-pressure areas.

IMPORTANT: Make-up air ***must be*** provided from a source free of dry cleaning solvent fumes. Make-up air that is contaminated by dry cleaning solvent fumes will result in irreparable damage to the motors and other dryer components.

IMPORTANT: Make-up air openings ***should not be*** located near ductwork exhaust outlets. If make-up air openings are too close to the exhaust outlet, lint and fumes may be drawn back into the dryer area through these openings.

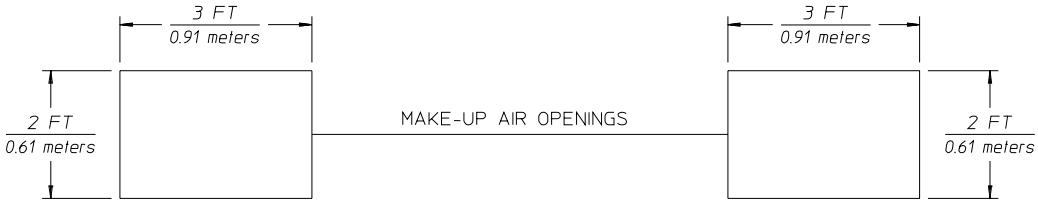

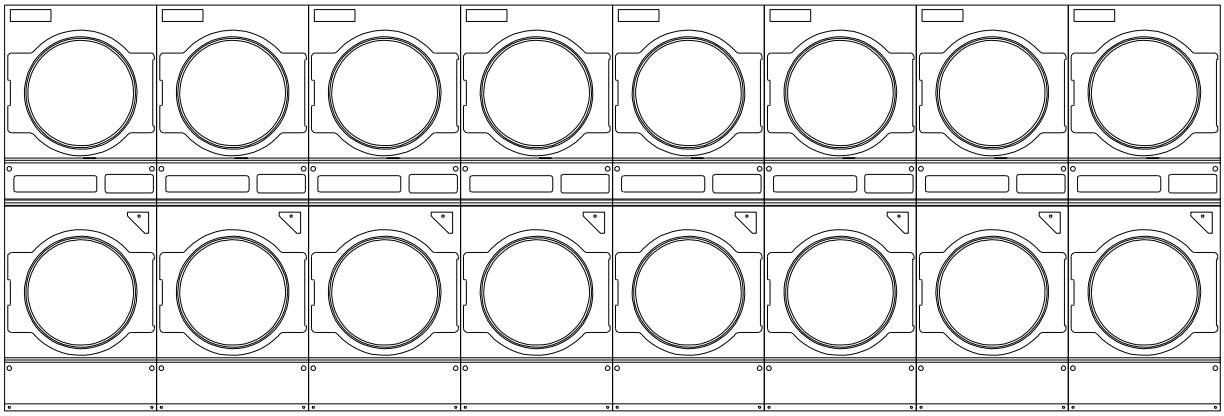

TYPICAL INSTALLATION SHOWING MAKE-UP AIR OPENINGS

NOTE: Component failure due to dry cleaning solvent fumes will VOID THE WARRANTY.

E. EXHAUST REQUIREMENTS

Exhaust ductwork **should be** designed and installed by a qualified professional. Improperly sized ductwork will create excessive back pressure, which results in slow drying, increased use of energy, overheating of the dryer, and shut down of the burner by the airflow (sail) switches, burner hi-limits, or basket (tumbler) hi-heat thermostats. The dryer **must be** installed with a proper exhaust duct connection to the outside.

CAUTION: This dryer produces combustible lint and ***must be*** exhausted to the outdoors.

CAUTION: IMPROPERLY SIZED OR INSTALLED EXHAUST DUCTWORK CAN CREATE A POTENTIAL FIRE HAZARD.

The exhaust ductwork **should be** laid out in such a way that the ductwork travels as directly as possible to the outdoors with as few turns as possible. When single dryer 10-inch (25.4 cm) vertical venting is used, the ductwork from the dryer to the outside exhaust outlet **must not exceed** 35 feet (10.67 meters) or for 10-inch (25.4 cm) horizontal venting, **must not exceed** 10 feet (3.05 meters). In the case of multiple (common) dryer venting, the distance from the last dryer to the outside exhaust outlet **must not exceed** 15 feet (4.57 meters). The shape of the exhaust ductwork is not critical as long as the minimum cross-sectional area is provided.

It is suggested that the use of 90º turns in ducting be avoided; use 30º or 45º angles instead. Excluding basket (tumbler)/dryer elbow connections or elbows used for outside protection from the weather, no more than two (2) elbows **should be** used in the exhaust duct run. If more than two (2) elbows are used, the cross section area of the ductwork **must be** increased in proportion to the number of elbows added.

1. Exhaust Connections of Top and Bottom Baskets (Tumblers)

   There is no common venting connection provided with the dryer. Each basket (tumbler) exhaust duct is provided with its own back draft damper. Each basket (tumbler) can be exhausted directly outdoors independently or connected to a common duct. Both single and common ductwork can be rigid ducting or flexible ducting. For common connections, a kit (P/N 882035) is available from the factory and includes the necessary flex ducting, elbows, and "Y" assembly, etc., to join the top and bottom exhausts together.

   ALL ductwork joints **must be** taped to prevent moisture and lint from escaping into the building.

IMPORTANT: Exhaust back pressure measured by a manometer at each basket (tumbler) exhaust duct area ***must be*** no less than 0 and ***must not exceed*** 0.3 inches (0.74 mb) water column (W.C.) when both baskets (tumblers) are operating.

NOTE: Common exhaust connections of top and bottom baskets (tumblers) ***should be*** installed in such a manner that the back guards can be removed easily for servicing.

IMPORTANT: **It is recommended** that exhaust or booster fans NOT BE USED in the exhaust ductwork system.

NOTE: As per the National Fuel Gas Code, "Exhaust ducts for Type 2 clothes dryers shall be constructed of sheet metal or other noncombustible material. Such ducts shall be equivalent in strength and corrosion resistance to ducts made of galvanized sheet steel not less than 0.0195-inches (26 gauge [0.05 mm]) thick."

2. Single Dryer Venting

Where possible, it is suggested to provide a separate exhaust duct for each dryer. The exhaust ductwork **should be** laid out in such a way that the ductwork travels as directly as possible to the outdoors with as few turns as possible. It is suggested that the use of 90º turns in ducting be avoided; use 30º or 45º angles instead. The shape of the exhaust ductwork is not critical as long as the minimum cross-sectional area is provided.

NOTE: Exhaust back pressure measured by a manometer at the dryer exhaust duct area ***must be*** no less than 0 and ***must not exceed*** 0.3 inches (0.74 mb) water column (W.C.).

It is suggested that the ductwork from each dryer not exceed the limitations noted in this manual. If the ductwork exceeds these limitations or has numerous elbows, the cross-sectional area of the ductwork **must be** increased in proportion to length or number of elbows in it.

IMPORTANT: For extended ductwork runs, the cross-sectional area of the ductwork can only be increased to an extent. When the ductwork approaches the maximum limits as noted in this manual, a professional heating, ventilating, and air-conditioning (HVAC) firm ***should be*** consulted for proper venting information.

The ductwork **should be** smooth inside with no projections from sheet metal screws or other obstructions, which will collect lint. When adding ducts, the duct to be added should overlap the duct to which it is to be connected. **ALL** ductwork joints **must be** taped to prevent moisture and lint from escaping into the building. Also, inspection doors **should be** installed at strategic points in the exhaust ductwork for periodic inspection and cleaning.

NOTE: When the exhaust ductwork passes through a wall, ceiling, or roof made of combustible materials, the opening ***must be*** 2-inches (5.08 cm) larger than the duct (all the way around). The duct ***must be*** centered within this opening.

To protect the outside end of the horizontal ductwork from the weather, a 90º elbow bent downward **should be** installed where the exhaust exits the building. If the exhaust ductwork travels vertically up through the roof, it **should be** protected from the weather by using a 180º turn to point the opening downward. In either case, allow at least twice the diameter of the duct between the duct opening and nearest obstruction.

IMPORTANT: ***DO NOT*** use screens, louvers, or caps on the outside opening of the exhaust ductwork.

NOTE: Refer to the **illustrations** on **page 13 and page 14** for examples of single dryer venting.

EXTERNAL SINGLE DRYER VENTING CONNECTIONS

(WITH DRYER COMMON EXHAUST)

VERTICAL DUCTING

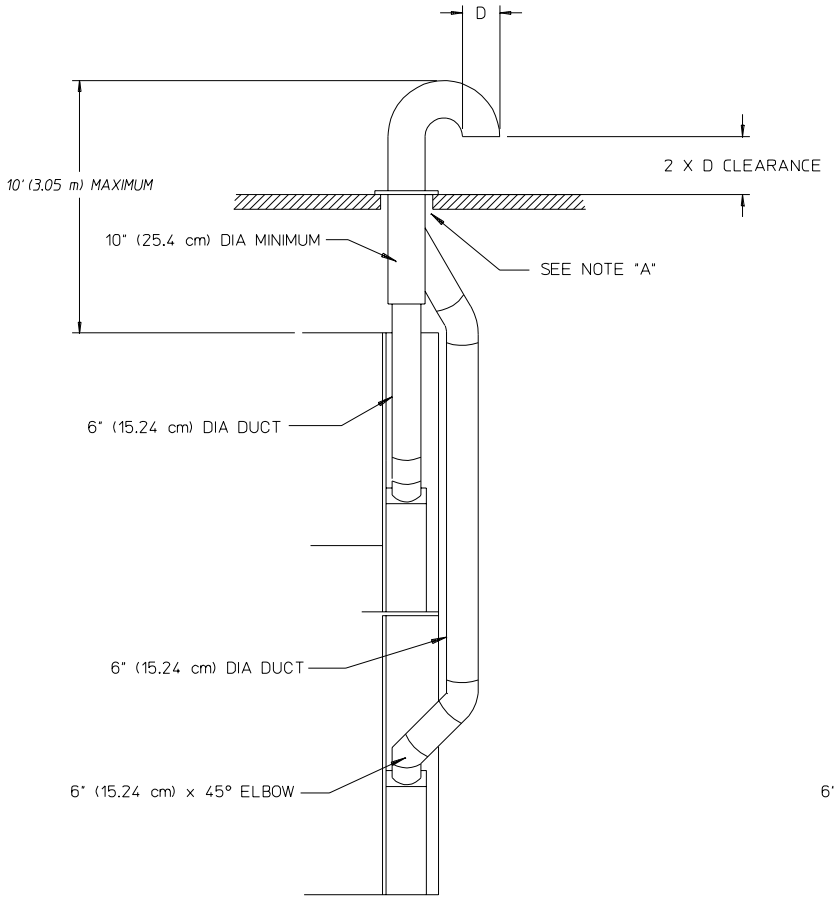

SIDE VIEW OF DRYER
(SECTION VIEW)

HORIZONTAL DUCTING

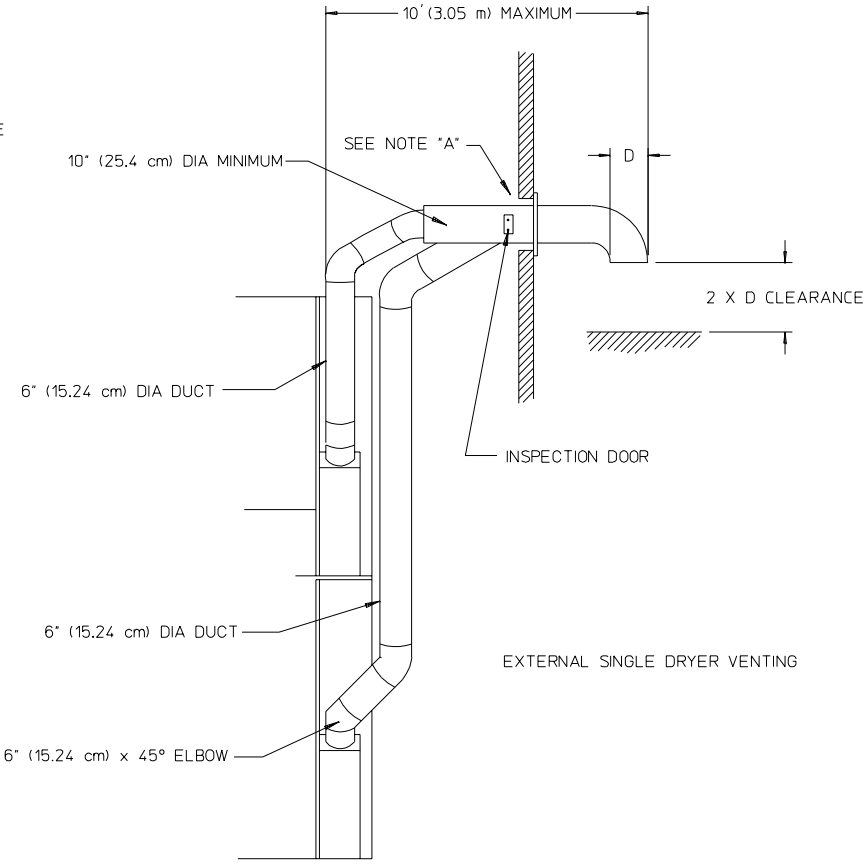

SIDE VIEW OF DRYER
(SECTION VIEW)

EXTERNAL SINGLE DRYER VENTING

MAN6160

GS 4/30/02

NOTE "A": OPENING MUST BE 2-INCHES (5.08 cm) LARGER THAN THE DUCT (ALL THE WAY AROUND).
THE DUCT MUST BE CENTERED WITHIN THE OPENING.

EXTERNAL SINGLE DRYER VENTING CONNECTIONS

(WITH DRYER INDEPENDENT EXHAUST)

VERTICAL DUCTING

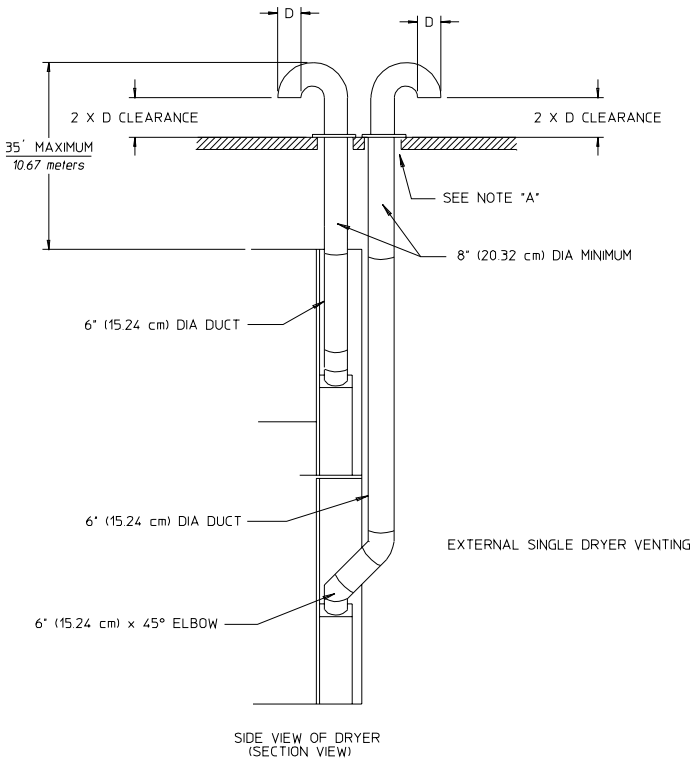

HORIZONTAL DUCTING

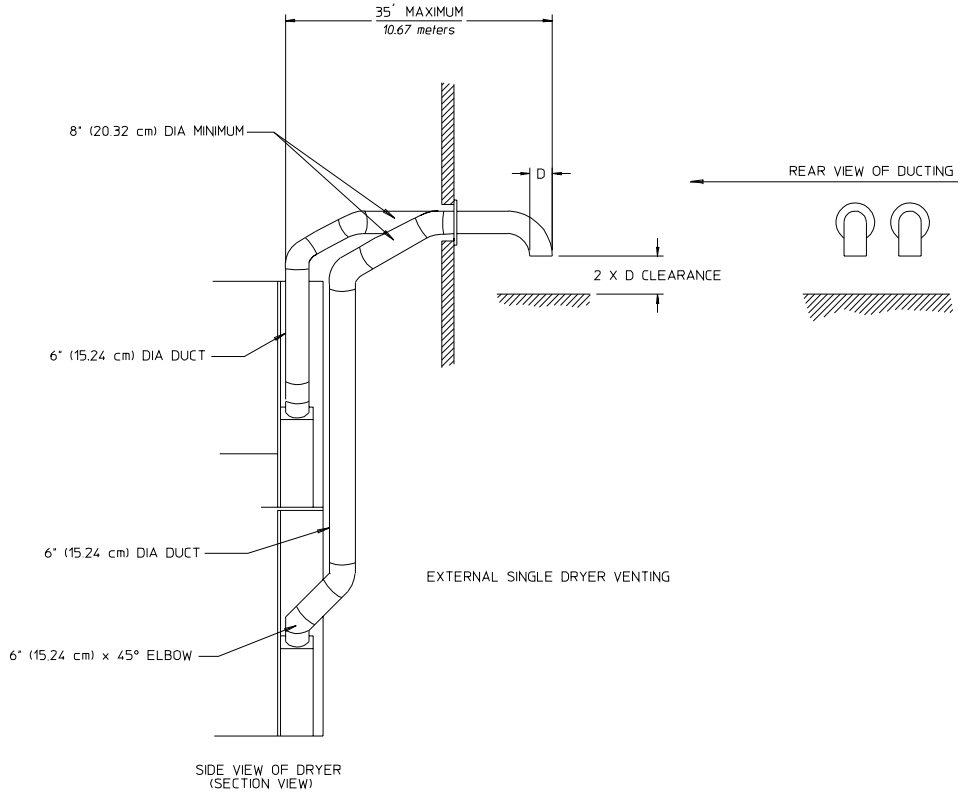

MAN5303

TCOSTA 05/23/00

NOTE "A": OPENING MUST BE 2-INCHES (5.08 cm) LARGER THAN THE DUCT (ALL THE WAY AROUND).
THE DUCT MUST BE CENTERED WITHIN THE OPENING.

3. Multiple Dryer (Common) Venting

If it is not feasible to provide separate exhaust ducts for each dryer, ducts from individual dryers may be channeled into a "common main duct." The individual ducts should enter the bottom or side of the main duct at an angle not more than 45° in the direction of airflow. The main duct **should be** tapered, with the diameter increasing before each individual 10-inch (25.4 cm) duct (when dryer common exhaust is used) is added. If single 6-inch (15.24 cm) basket (tumbler) exhaust ducts are used, the diameter **should be** increased after every second 6-inch (15.24 cm) duct.

IMPORTANT: No more than four (4) dryers or eight (8) baskets (tumblers) total ***should be*** connected to one (1) main common duct.

NOTE: Refer to the **illustrations** on **page 17** for examples of multiple dryer (common) venting.

The main duct may be any shape or cross-sectional area as long as the minimum cross-sectional area is provided. The **illustrations** on **page 17** show the minimum cross-sectional area for multiple dryer venting. These figures **must be** increased in proportion if the main duct run from the last dryer to where it exhausts to the outdoors is unusually long (over 15 feet [4.57 meters]) or has numerous elbows (more than one [1]) in it. In calculating ductwork size, the cross-sectional area of a square or rectangular duct **must be** increased twenty percent (20%) for each additional 15 feet (4.57 meters). The diameter of a round exhaust **must be** increased ten percent (10%) for each additional 15 feet (4.57 meters).

IMPORTANT: For extended ductwork runs, the cross-sectional area of the ductwork can only be increased to an extent. Maximum proportional ductwork run **cannot** exceed 15 feet (4.57 meters) more than the original limitations of 15 feet (4.57 meters) with two (2) elbows. When the ductwork approaches the maximum limits as noted in this manual, a professional heating, ventilating, and air-conditioning (HVAC) firm ***should be*** consulted for proper venting information.

IMPORTANT: Exhaust back pressure measured by a manometer at each basket (tumbler) exhaust duct area ***must be*** no less than 0 and ***must not exceed*** 0.3 inches (0.74 mb) water column (W.C.).

The ductwork **should be** smooth inside with no projections from sheet metal screws or other obstructions, which will collect lint. When adding ducts, the duct to be added should overlap the duct to which it is to be connected. **ALL** ductwork joints **must be** taped to prevent moisture and lint from escaping into the building. Also, inspection doors **should be** installed at strategic points in the exhaust ductwork for periodic inspection and cleaning.

NOTE: When the exhaust ductwork passes through a wall, ceiling, or roof made of combustible materials, the opening ***must be*** 2-inches (5.08 cm) larger than the duct (all the way around). The duct ***must be*** centered within this opening.

To protect the outside end of the horizontal ductwork from the weather, a 90º elbow bent downward **should be** installed where the exhaust exits the building. If the exhaust ductwork travels vertically up through the roof, it **should be** protected from the weather by using a 180º turn to point the opening downward. In either case, allow at least twice the diameter of the duct between the duct opening and nearest obstruction.

IMPORTANT: ***DO NOT*** use screens, louvers, or caps on the outside opening of the exhaust ductwork.

NOTE: Refer to the **illustrations** on **page 17** for examples of multiple dryer (common) venting.

DRYER COMMON EXHAUST CONNECTIONS USING FLEX DUCT WORK

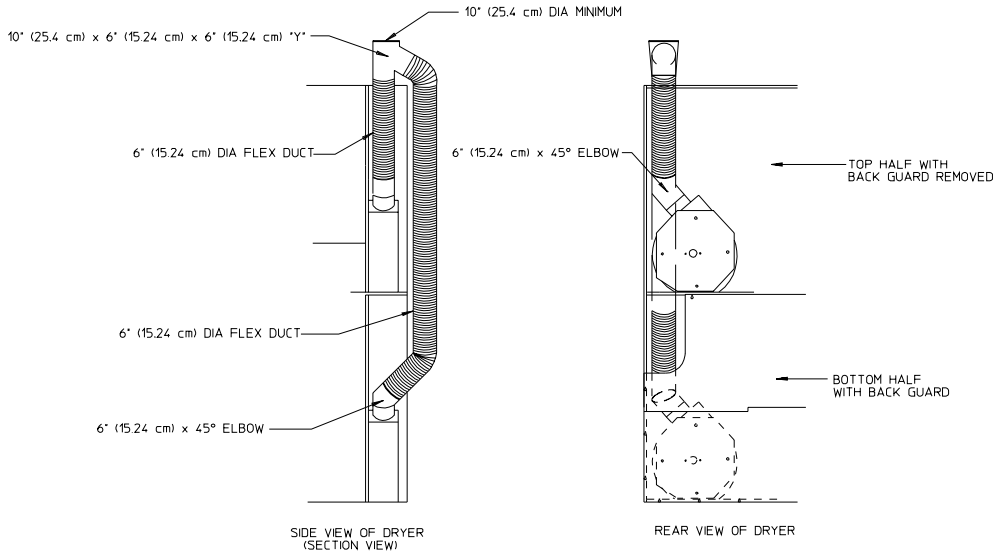

NOTE: USE DUCT TAPE AT ALL CONNECTIONS.

REFERENCE: OPTIONAL EXHAUST DUCT KIT P/N 882035

DRYER COMMON EXHAUST CONNECTIONS USING RIGID DUCT WORK

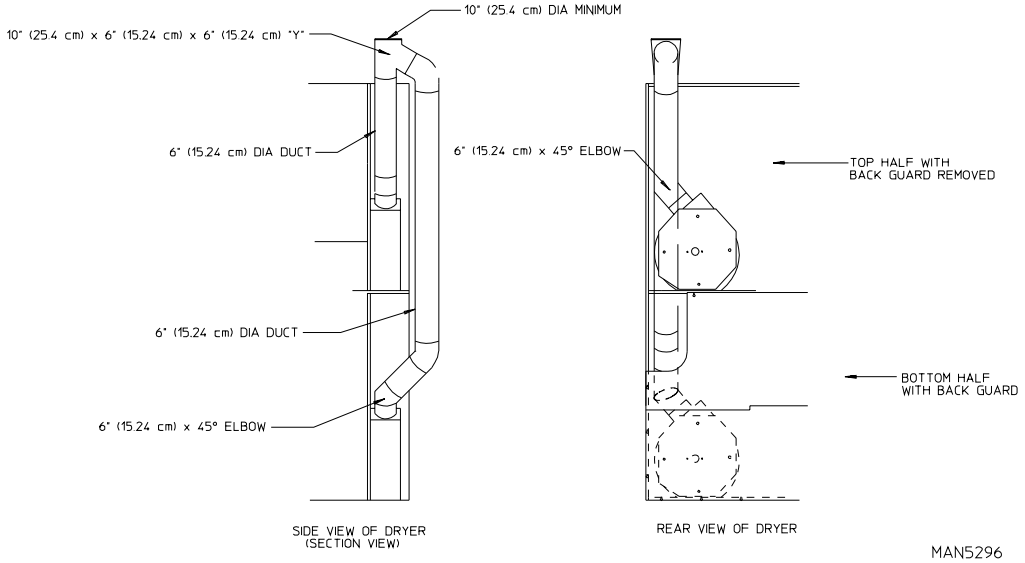

TCOSTA 05/24/00

MAN5296

NOTE: USE DUCT TAPE AT ALL CONNECTIONS.

MULTIPLE DRYER VENTING
WITH 10" (25.4 cm) DIAMETER EXHAUST CONNECTIONS AT COMMON DUCT

NO. OF DRYERS	4	3	2	1
MINIMUM CROSS (SQ IN) SECTION AREA (SQ CM)	210 1354	164 1058	120 774	80 516
MINIMUM ROUND (IN) DUCT DIAMETER (CM)	16 40	14 35	12 30	10 25

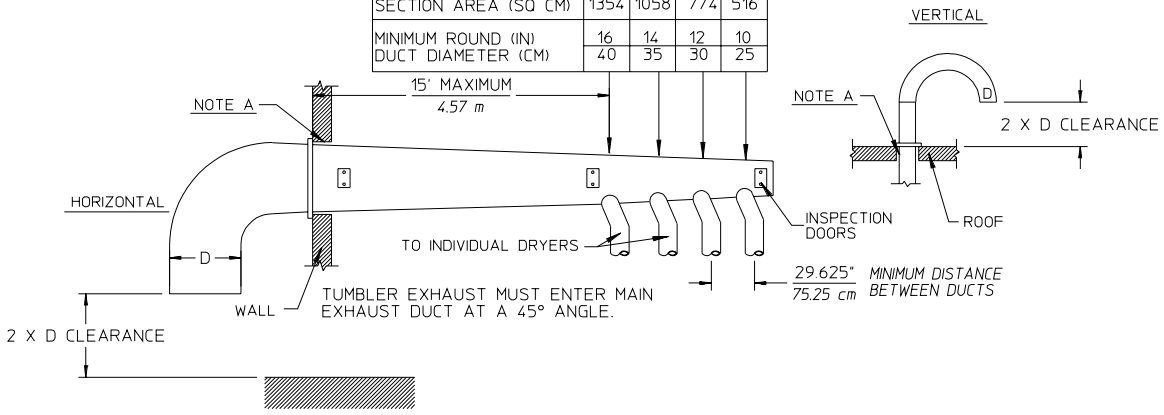

IMPORTANT: NO MORE THAN 4 DRYERS (8 TUMBLERS) CAN BE CONNECTED TO ONE COMMON DUCT (VENT).

TCOSTA 05/24/00 MAN5309

FORMULAS TO CALCULATE DUCTING CROSS SECTIONAL AREA

CROSS SECTIONAL AREA OF A ROUND DUCT = .785 (19.939 mm) x D^2 WHERE D = DIAMETER OF THE DUCT.

CROSS SECTIONAL AREA OF A RECTANGULAR DUCT = W x H WHERE W = WIDTH AND H = HEIGHT.

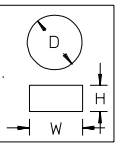

NOTE A: OPENING MUST BE 2-INCHES (5.08 cm) LARGER THAN THE DUCT (ALL THE WAY AROUND). THE DUCT MUST BE CENTERED WITHIN THIS OPENING.

MULTIPLE DRYER VENTING
WITH 6" (15.24 cm) DIAMETER EXHAUST CONNECTIONS AT COMMON DUCT

NO. OF TUMBLERS	8	7	6	5	4	3	2	1
MINIMUM CROSS (SQ IN) SECTION AREA (SQ CM)	210 1354	210 1354	164 1058	164 1058	120 774	120 774	80 516	54 348
MINIMUM ROUND (IN) DUCT DIAMETER (CM)	16 40	16 40	14 35	14 35	12 30	12 30	10 25	8 20

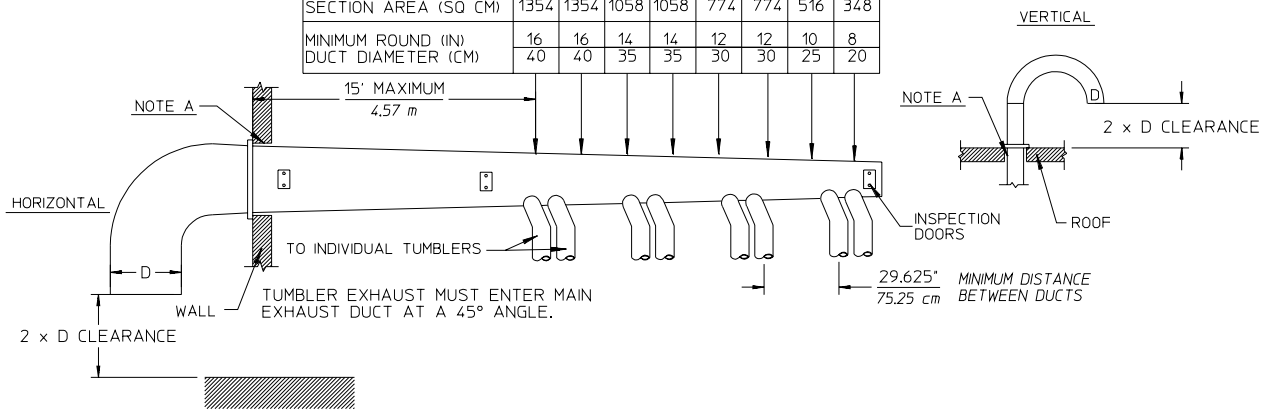

IMPORTANT: NO MORE THAN 4 DRYERS (8 TUMBLERS) CAN BE CONNECTED TO ONE COMMON DUCT (VENT).

JEV 2/8/02 MAN6072

FORMULAS TO CALCULATE DUCTING CROSS SECTIONAL AREA

CROSS SECTIONAL AREA OF A ROUND DUCT = .785 (19.939 mm) x D^2 WHERE D = DIAMETER OF THE DUCT.

CROSS SECTIONAL AREA OF A RECTANGULAR DUCT = W x H WHERE W = WIDTH AND H = HEIGHT.

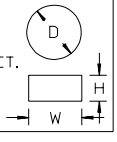

NOTE A: OPENING MUST BE 2-INCHES (5.08 cm) LARGER THAN THE DUCT (ALL THE WAY AROUND). THE DUCT MUST BE CENTERED WITHIN THIS OPENING.

F. ELECTRICAL INFORMATION

1. Electrical Requirements

It is your responsibility to have **ALL** electrical connections made by a properly licensed and competent electrician to ensure that the electrical installation is adequate and conforms with local and state regulations or codes. In the absence of such codes, **ALL** electrical connections, materials, and workmanship **must conform** to the applicable requirements of the National Electrical Code ANSI/NFPA NO. 70-LATEST EDITION, or in Canada, the Canadian Electrical Codes Parts 1 & 2 CSA C22.1-1990 or LATEST EDITION.

IMPORTANT: Failure to comply with these codes or ordinances, and/or the requirements stipulated in this manual, can result in personal injury or component failure.

NOTE: Component failure due to improper installation will VOID THE WARRANTY.

It is recommended that a separate circuit servicing each basket (tumbler) be provided. The dryer **must be** connected to copper wire ONLY. **DO NOT** use aluminum wire, which could cause a fire hazard.

NOTE: The use of aluminum wire will VOID THE WARRANTY.

2. Electrical Connections

A wiring diagram is included with each dryer showing the wiring connection sequence. The electrical connections are made in a box located at the top of the dryer. The dryer is shipped with three (3) connection points (L1, L2/Neutral, and Ground) for each basket (tumbler).

If local codes permit, power to the dryer can be made by use of a flexible U.L. listed power cord/pigtail (wire size **must conform** to rating of dryer), or the dryer can be hard wired directly to the service breaker panel. In both cases, a strain relief **must be** installed where the wiring enters the dryer.

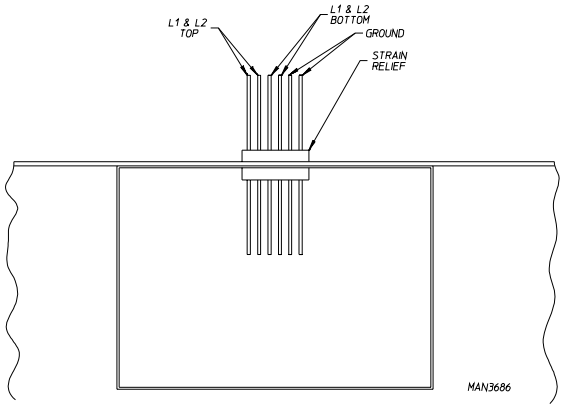

Electrical Connections Leads		
Black + Positive	White - Neutral	Green Ground
(L1)	(L2)	(GND)

NOTE: **It is recommended** that a circuit servicing each basket (tumbler/drum) be provided.

3. Grounding

Grounding (earth) connections **must be** provided and installed in accordance with state and local codes. In the absence of these codes, grounding **must conform** to applicable requirements of the National Electrical Code ANSI/NFPA NO. 70-LATEST EDITION, or in Canada, the installation **must conform** to applicable Canada Standards: Canadian Electrical Codes Parts 1 & 2 CSA C22.1-1990 or LATEST EDITION. The ground connection may be to a proven earth ground at the location service panel.

For added personal safety, when possible, it is suggested that a separate ground wire (sized per local codes) be connected from the ground connection of the dryer to a grounded cold water pipe. ***DO NOT ground to a gas pipe or hot water pipe***. The grounded cold water pipe must have metal-to-metal connections **ALL** the way to the electrical ground. If there are any nonmetallic interruptions, such as, a meter, pump, plastic, rubber, or other insulating connectors, they **must be** jumped out with No. 4 wire and securely clamped to bare metal at both ends.

IMPORTANT: For personal safety and proper operation, the dryer ***must be*** grounded.

4. Electrical Service Specifications (per pocket)

IMPORTANT: The dryer ***must be*** connected to the electrical supply shown on the data label.

WARNING: Any damage done to dryer components due to improper voltage application or connections will automatically VOID THE WARRANTY.

ELECTRICAL SERVICE SPECIFICATIONS (PER POCKET) GAS ONLY

SERVICE VOLTAGE	PHASE	WIRE SERVICE	APPROX. AMP DRAW	MINIMUM WIRE SIZE	FUSING (Dual Element Time Delay)	CIRCUIT BREAKER
115	1ø	2	7.0	*	15	15

* AWG Stranded Wire Type - size wire as per National Electrical Code or local codes. 1/15/04

NOTE: Contact factory for electrical information not listed.

NOTES: 1. Fuse ratings are dual element time delay current limiting, class RK1 or RK5 ONLY.
2. Circuit breakers are thermal-magnetic (industrial) motor curve type ***ONLY***. For others, calculate/verify correct breaker size according to appliance amp draw and type of breaker used.

NOTE: Manufacturer reserves the right to make changes in specifications at any time without notice or obligation.

G. GAS INFORMATION

It is your responsibility to have **ALL** plumbing connections made by a qualified professional to ensure that the gas plumbing installation is adequate and conforms with local and state regulations or codes. In the absence of such codes, **ALL** plumbing connections, materials, and workmanship **must conform** to the applicable requirements of the National Fuel Code ANSI Z223.1-LATEST EDITION or in Canada, CAN/CGA-B149.1-M91 (Natural Gas) or CAN.CGA-B149.2-M91 (Liquid Propane [L.P.] Gas) or LATEST EDITION (for General Installation and Gas Plumbing), as well as local codes and ordinances and **must be** done by a qualified professional.

IMPORTANT: Failure to comply with these codes or ordinances, and/or the requirements stipulated in this manual, can result in personal injury and improper operation of the dryer.

The dryer and its individual shutoff valve **must be** disconnected from the gas supply piping system during any pressure testing of that system at test pressures in excess of 1/2 psig (3.5 kPa).

The dryer **must be** isolated from the gas supply piping system by closing its individual manual shutoff valve during any pressure testing of the gas supply system at test pressures equal to or less than 1/2 psig (3.5 kPa).

IMPORTANT: Failure to isolate or disconnect the dryer from supply as noted, could cause irreparable damage to the gas valve, which will VOID THE WARRANTY.

WARNING: **FIRE OR EXPLOSION COULD RESULT** due to failure of isolating or disconnecting the gas supply as noted.

1. Gas Supply

   The gas dryer installation **must meet** the American National Standard...National Fuel Gas Code ANSI Z223.1-LATEST EDITION, or in Canada, the Canadian Installation Codes CAN/CGA-B149.1 M91 (Natural Gas) or CAN/CGA-B149.2-M91 (L.P. Gas) or LATEST EDITION, as well as local codes and ordinances and **must be** done by a qualified professional.

NOTE: Undersized gas piping will result in ignition problems, slow drying, increased use of energy, and can create a safety hazard.

The dryer **must be** connected to the type of heat/gas indicated on the dryer data label. If this information does not agree with the type of gas available, contact the dealer who sold the dryer or contact **Maytag Co**.

IMPORTANT: Any burner changes or conversions ***must be*** made by a qualified professional.

The input ratings shown on the dryer data label are for elevations up to 2,000 feet (609.6 meters) unless elevation requirements of over 2,000 feet (609.6 meters) were specified at the time the dryer order was placed with the factory. The adjustment or conversion of dryers in the field for elevations over 2,000 feet (609.6 meters) is made by changing each burner orifice. If this conversion is necessary, contact the dealer who sold the dryer or contact **Maytag Co**.

2. Technical Gas Data

a. Gas Specifications

	TYPE OF GAS			
	NATURAL		LIQUID PROPANE	
Manifold Pressure*	3.5 inches W.C.	**8.7 mb**	10.5 inches W.C.	**26.1 mb**
In-Line Pressure	6.0 - 12.0 inches W.C.	**14.92 - 29.9 mb**	11.0 inches W.C.	**27.4 mb**

Shaded areas are stated in metric equivalents

* Measured at gas valve pressure tap when gas valve is on.

Gas Inlet Size (Each Basket [Tumbler])	1/2" F.N.P.T.	
Btu/hr Input (Each Basket [Tumbler])	68,000	**17,136 kcal/hr**
Btu/hr Input (Total for Both Baskets [Tumblers])	136,000	**34,272 kcal/hr**

F.N.P.T. = Female National Pipe Thread

b. Natural Gas

Regulation is controlled by each gas valve's internal regulator. Incoming supply pressure **must be** consistent between a minimum of 6.0 inches (14.92 mb) and a maximum of 12.0 inches (29.9 mb) water column (W.C.) pressure.

c. Liquid Propane (L.P.) Gas

Dryers made for use with L.P. gas have the gas valve's internal pressure regulator blocked open so that the gas pressure **must be** regulated upstream of the dryer. The pressure measured at each gas valve pressure tap **must be** a consistent 10.5 inches (26.1 mb) water column. There is no regulator or regulation provided in an L.P. dryer. The water column pressure **must be** regulated at the source (L.P. tank) or an external regulator **must be** added to each dryer.

3. Piping/Connections

ALL components/materials **must conform** to National Fuel Gas Code Specifications ANSI Z223.1-LATEST EDITION, or in Canada, CAN/CGA-B149.1-M91 (Natural Gas) or CAN/CGA-B149.2-M91 (Liquid Propane [L.P.] Gas) or LATEST EDITION (for General Installation and Gas Plumbing), as well as local codes and ordinances and **must be** done by a qualified professional. It is important that gas pressure regulators meet applicable pressure requirements, and that gas meters be rated for the total amount of **ALL** the appliance Btus being supplied.

The dryer is provided with two (2) 1/2" N.P.T. inlet pipe connections (one [1] for each basket [tumbler]) at the rear of the dryer. If a separate feed is provided for each basket (tumbler) from the main supply line (header), then a 1/2" (12.7 mm) line connection is sufficient. However, if the top and bottom basket (tumbler) connections are connected together, the supply from the header **must be** increased to 3/4-inch (19.05 mm). An optional piping kit is available from the factory as illustrated below and on **page 40**. It is recommended that a gas shutoff valve be provided to the gas supply line of each dryer for ease in servicing.

TYPICAL GAS CONNECTIONS

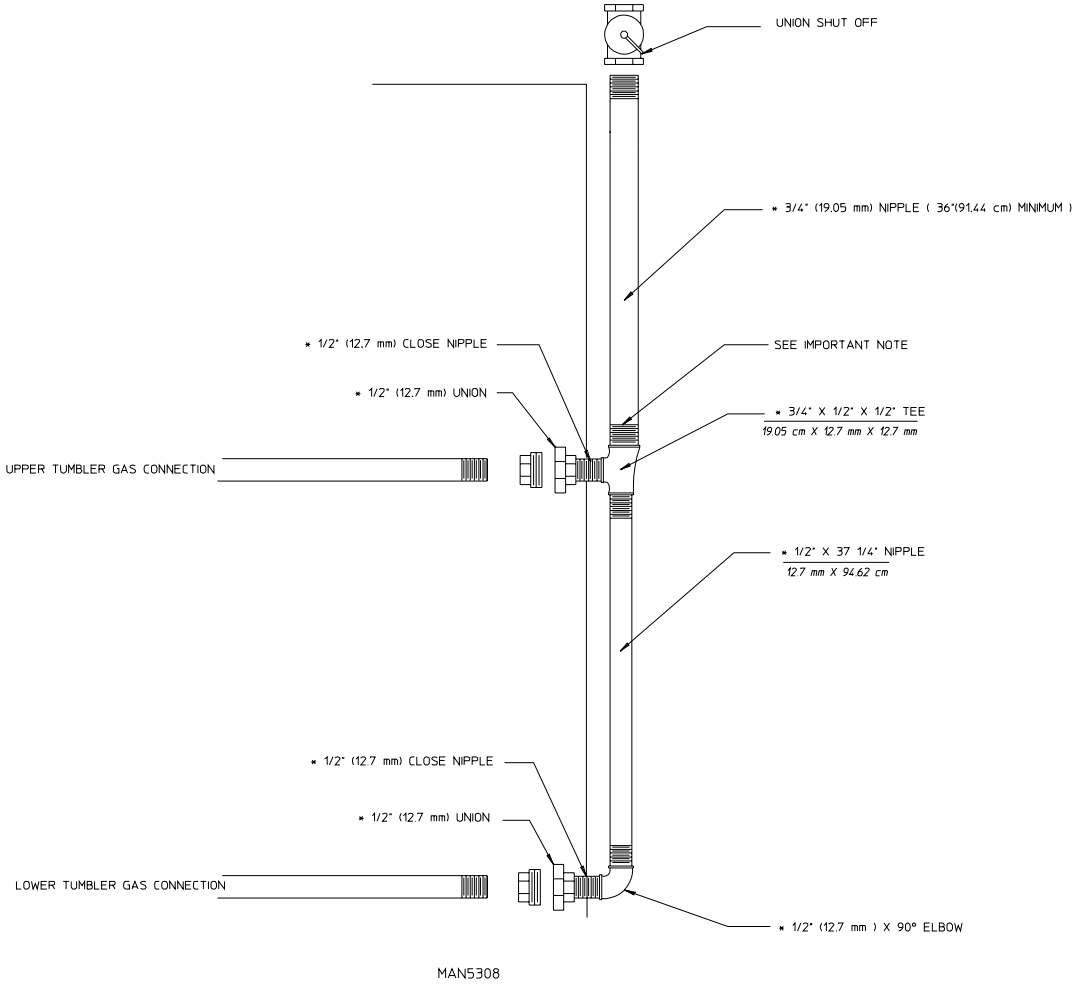

IMPORTANT: When plumbing upper and lower baskets (tumblers) together, as illustrated above, supply connection ***must be*** a minimum of 3/4" (19.05 mm).

The size of the main gas supply line (header) will vary depending on the distance this line travels from the gas meter (or in the case of liquid propane [L.P.] gas, the supply tank), the number of tees, other gas-operated appliances on the supply line, etc. Specific information regarding supply line size **should be** determined by the gas supplier.

NOTE: Undersized gas supply piping can create a low or inconsistent pressure, which will result in erratic operation of the burner ignition system.

Consistent gas pressure is essential at **ALL** gas connections. It is recommended that a 3/4" (19.05 mm) pipe loop be installed in the supply line servicing the bank of dryers. An in-line pressure regulator **must be** installed in the gas supply line (header) if (natural) gas line pressure exceeds 12.0 inches (29.9 mb) water column (W.C.) pressure. Refer to the **illustration** on **page 24** for details.

IMPORTANT: Water column pressure of 3.5 inches (8.7 mb) for natural gas dryers and 10.5 inches (26.1 mb) for L.P. gas is required at the gas valve pressure tap of each dryer for proper and safe operation.

A 1/8" N.P.T. plugged tap, accessible for a test gauge connection, **must be** installed in the main gas supply line immediately upstream of each dryer.

IMPORTANT: Pipe joint compounds that resist the action of natural gas and L.P. gas ***must be*** used.

WARNING: Test **ALL** connections for leaks by brushing on a soapy water solution (liquid detergent also works well). **NEVER TEST FOR GAS LEAKS WITH AN OPEN FLAME!!!**

TYPICAL NATURAL GAS INSTALLATION

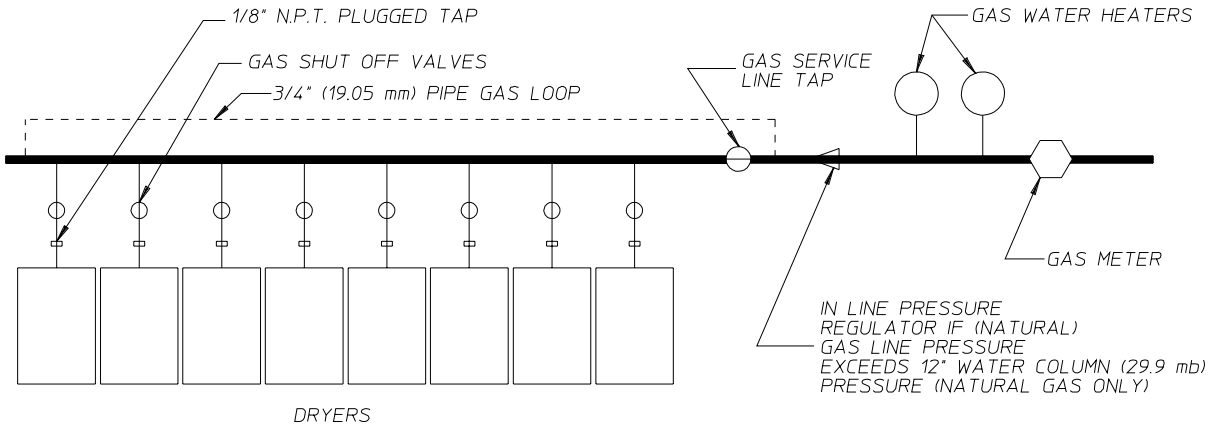

MAN5155

TYPICAL L.P. GAS INSTALLATION

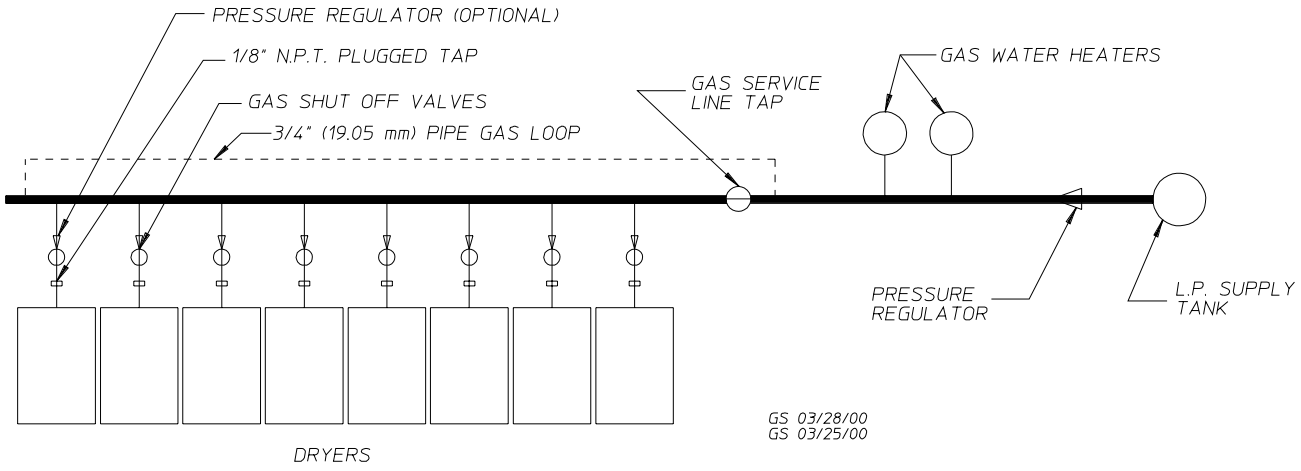

GS 03/28/00
GS 03/25/00

H. PREPARATION FOR OPERATION

The following items **should be** checked before attempting to operate the dryer:

1. Read **ALL** "**CAUTION**," "**WARNING**," and "**DIRECTION**" labels attached to the dryer.

2. Check incoming supply voltage to be sure that it is the same as indicated on the dryer data label.

3. **GAS MODELS** – check to ensure that the dryer is connected to the type of heat/gas indicated on the dryer data label.

4. **GAS MODELS** – the sail switch damper assembly was installed and adjusted at the factory prior to shipping. However, each sail switch adjustment **must be** checked to ensure that this important safety control is functioning.

5. Check bolts, nuts, screws, terminals, and fittings for tightness.

6. **GAS MODELS** – be sure that **ALL** gas shutoff valves are in the open position.

7. Be sure **ALL** back guard panels and service box covers have been replaced.

8. Check the lint door to ensure that it is closed and secured in place.

9. Rotate the basket (tumbler) by hand to be sure they move freely.

10. To facilitte door closure and better tumbling action (and improved efficiency), the dryer **should be** tilted slightly to the rear.

I. PREOPERATIONAL TESTS

ALL dryers are thoroughly tested and inspected before leaving the factory. However, a preoperational test **should be** performed before the dryer is publicly used. It is possible that adjustments have changed in transit.

1. Turn on electric power to the dryer: open **ALL** gas shutoff valves.

2. Computer System Operational Test

    a. Coin Models

        1) The liquid crystal display (L.C.D.) screen reads "Ready," insert amount to start (i.e. 25¢).

        2) Insert coin(s). Once the correct amount has been inserted, the display for the appropriate pocket will display "SELECT TEMP TO START".

        3) Start temperature by pressing "HIGH," "MEDIUM," or "LOW" for the dryer pocket you wish to start the cycle in. The cycle/dryer will start, and the L.C.D. will read the drying cycle selected, and the remaining time.

4) The dryer will continue through the drying and cooling cycles until the time vended has expired.

NOTE: The dryer can be stopped at any time by opening the main loading door or pressing the pause key. To restart the dryer, press appropriate temperature selection key.

5) Upon completion of the drying and cooling cycles, the buzzer will sound, and the dryer will go into the Anti-Wrinkle mode for 99 minutes, or until the main door is opened.

IMPORTANT: For complete operation details for the computer system refer to the user's manual included with the dryer.

b. FREE Dry Mode

1) The liquid crystal display (L.C.D.) screen reads "Select Temperature."

2) Select temperature by pressing "HIGH," "MEDIUM," or "LOW." The cycle/dryer will start and the display will read cycle time.

3) The dryer will continue through the drying and cooling cycles until the drying time and cooling time has expired.

NOTE: The dryer can be stopped at any time by opening the main loading door or pressing the pause key. To restart the dryer, press appropriate temperature selection key.

4) Upon completion of the drying and cooling cycles, the buzzer will sound, and the dryer will go into the Anti-Wrinkle mode for 99 minutes, or until the main door is opened.

IMPORTANT: For complete operation details for the computer system refer to the user's manual included with the dryer.

3. Heat Circuit Operational Test

Gas Models

When a gas dryer is first started (during initial start-up), it has a tendency not to ignite on the first ignition attempt. This is because the gas supply piping is filled with air, so it may take a few minutes for the air to be purged from the lines.

The dryer is equipped with a Direct Spark Ignition (DSI) system, which has internal diagnostics. If ignition is not established after three (3) attempts, the heat circuit DSI module will lock out until it is manually reset. To reset the DSI system, open and close the main door and restart the dryer (press desired temperature selection).

NOTE: During the purging period, check to be sure that **ALL** gas shutoff valves are open.

Once ignition is established, a gas pressure test **should be** taken at the gas valve pressure tap of each dryer to ensure that the water column (W.C.) pressure is correct and consistent.

NOTE: Water column (W.C.) pressure requirements (measured at the gas valve pressure tap):

Natural Gas ..... 3.5 Inches (8.7 mb) Water Column.
Liquid Propane (L.P.) Gas ..... 10.5 Inches (26.1 mb) Water Column.

IMPORTANT: **THERE IS NO REGULATOR PROVIDED IN AN L.P. DRYER**. The water column pressure ***must be*** regulated at the source (L.P. tank) or an external regulator ***must be*** added to each dryer.

4. Make a complete operational check of **ALL** safety-related circuits (i.e., lint basket switches and sail switches).

5. Each basket (tumbler) **should be** operated through one (1) complete cycle to ensure that no further adjustments are necessary and that **ALL** components are functioning properly.

NOTE: The sail switch can be checked for proper operation by opening the control door while the dryer is running and the heating unit (burner) is active (on). The heating unit should shut off within a few seconds. If not, make the necessary adjustments.

BASKET (TUMBLER) COATING

The basket (tumbler) is treated with a protective coating. We suggest dampening old garments or cloth material with a solution of water and nonflammable mild detergent and tumbling them in the basket (tumbler) to remove this coating.

NOTE: Drying and cooling cycles are complete when the light emitting diode (L.E.D.) display reads "donE."

6. Computer Programs/Selections:

   Each Dual Microprocessor Controller (DMC) computer has been preprogrammed by the factory with the most commonly used program (parameter) selections. If microprocessor controller (computer) program changes are required, refer to the **Dual Microprocessor Controller (DMC) Programming Manual,** which was shipped with the dryer.

J. SHUTDOWN INSTRUCTIONS

In the case where the dryer is to be shutdown (taken out of service) for a period of time, the following **must be** performed:

1. Discontinue power to the dryer (both baskets [tumblers]) either at the external disconnect switch or the circuit breaker.

2. Discontinue the gas supply:

   a. **SHUT OFF external gas supply shutoff valve** (for both the top basket [tumbler] and the bottom basket [tumbler] where the independent supply line for each basket [tumbler] is used).

   b. **SHUT OFF internal gas supply shutoff valve located in the gas valve burner area** (for both the top basket [tumbler] and the bottom basket [tumbler]).

SECTION IV
OPERATING INSTRUCTIONS

A. COIN MODE

1. When at least one (1) of the dryer's pockets is in the ready state and no cycle is in progress, the liquid crystal display (L.C.D.) screen will display a ready prompt depending on the READY PROMPT option in PL01 Control Settings. If the option is set to "READY, INSERT AMOUNT TO START", the display will read "READY, INSERT $ XX.XX TO START". If the READY PROMPT option in PL01 is set to "READY", the display will read "READY." If both pockets are idle, both sections of the L.C.D. will display the selected READY PROMPT message.

2. Insert coin(s). Once the correct "Amount to Start" has been inserted, the pocket will now display "SELECT TEMP TO START". If the other pocket was already in a cycle, that pocket will display "SELECT TEMP TO ADD TIME". If both pockets were idle, both pockets will display "SELECT TEMP TO START".

3. Select temperature by pressing "HIGH," "MEDIUM," or "LOW" on the dryer pocket you wish to start the cycle in. The cycle will start and the L.C.D. will display the Dry Cycle selected and the remaining time.

4. The dryer will continue through the drying and cooling cycles until the vended time has expired.

5. Upon completion of drying and cooling cycles the buzzer will sound, and the dryer will go into Wrinkle Guard mode for 99 minutes or until the door has been opened.

6. HOT KEYS – When the control is in coin mode, the HOT KEYS are disabled. The HOT KEYS can be enabled only if the dryer is in a dry cycle. The HOT KEYS cannot be enabled if the dryer is in "READY, INSERT 25¢ TO START" mode. To enable the HOT KEYS when the controller is in a dry cycle, toggle the program switch to the "UP" position. Once the program switch is in the "UP" position, the HOT KEYS are enabled. The HOT KEYS are as follows:

   Pressing and holding the "HI" key will show the remaining credit available.

   Pressing and holding the "MED" key will show the temperature readings of the exhaust probe. The exhaust probe temperature reading is displayed on the left. If the dryer is an axial model, the temperature reading of the axial temperature transducer will also be displayed; this will be the middle temperature reading.

   Pressing and holding the "LO" key will show the RPMs of the basket (tumbler).

   The "PAUSE" key will pause the dryer. If the dryer is paused, pressing the "HI" , "MED" , or "LO" key will restart the dryer into the appropriate drying cycle. Once the dry cycle has started again, the HOT KEYS will be enabled again.

B. FREE MODE

1. When the controller is in the ready state and no cycle is in progress, the liquid crystal display (L.C.D.) screen will display "SELECT TEMP TO START".

2. Select temperature by pressing "HI", "MED", or "LO". The cycle will start and the controller will display the Dry Cycle selected and the remaining time.

3. The dryer will continue through the drying and cooling cycles, until the drying time has expired.

4. Upon completion of the drying and cooling cycles, the buzzer will sound, and the dryer will go into Wrinkle Guard mode for 99 minutes or until the door has been opened.

5. HOT KEYS – In free mode, the HOT KEYS are always enabled. The HOT KEYS are as follows:

   Pressing and holding the "HI" key will show the remaining dry time available.

   Pressing and holding the "MED" key will show the temperature readings of the exhaust probe. The exhaust probe temperature reading is displayed on the left. If the dryer is an axial model, the temperature reading of the axial temperature transducer will also be displayed, this will be the middle temperature reading.

   Pressing and holding the "LO" key will show the RPMs of the basket (tumbler).

   The "PAUSE" key will pause the dryer. If the dryer is paused, pressing the "HI", "MED", or "LO" key will restart the dryer into the appropriate drying cycle. Once the dry cycle has started again, the HOT KEYS will be enabled again.

C. PAUSE MODE

If the "PAUSE" key is pressed and the door is not opened, the dryer will restart in 20-seconds. If the "PAUSE" key is pressed and the dryer door is opened and left open, the dryer will wait for the pause time defined in PL01 to expire. Once the pause time expires, the controller will begin to count down the dry time. If the dryer door is opened without first pressing the "PAUSE" key the controller will continue to count down the dry time.

D. RPM

The Phase 7 dual microprocessor controller (computer) also displays the basket (tumbler) RPM by pressing and holding the "LO" key while the basket (tumbler) is rotating (the basket [tumbler] **must be** rotating for approximately 30-seconds before getting a true RPM reading). In coin mode, the program switch **must be** in the "UP" position.

E. CLEARING CREDIT/CLEARING CYCLE

Credit can be cleared from either dryer pocket by using the following key combination. With the program switch down, press and hold the "PAUSE" key while entering "HI-HI-HI-LO-LO-MED". The combination is the "HI" key three (3) times followed by the "LO" key two (2) times and then the "MED" key one (1) time. Wait 1-second for the control to prompt the user with "CLEAR CREDIT?" If you want to proceed, simultaneously press the "PAUSE" button and one (1) of the remaining keys. This will clear the credit.

A cycle in free mode can be cleared by one (1) of the following two (2) options. The same key combination as clearing credit in coin mode can be used. With the program switch down, press and hold the "PAUSE" key while entering the following key combination: "HI-HI-HI-LO-LO-MED". Wait 1-second for the control to prompt the user with "CLEAR CYCLE?" If you want to proceed, simultaneously press the "PAUSE" button and one (1) of the remaining keys. This will clear the cycle. Another way of clearing a cycle in free mode is to press and hold the "PAUSE" key for 3-seconds.

F. ACCESSING COIN VAULT

The coin vault can be accessed by placing the program switch into the "UP" position. Once the program switch is in the "UP" position, press the "HI" key. The controller will now display the amount of money in the coin vault. Press the "HI" key again and the controller will ask to "CLEAR COIN VAULT TOTAL?" Press "PAUSE" for "NO" and press "MED" for "YES."

G. WRINKLE GUARD

This program keeps items wrinkle-free when they are not removed from the dryer promptly at the end of the drying cycle and/or cooling cycle.

When the drying and cooling cycles are completed, the dryer will shut off, the tone will sound, and the liquid crystal display (L.C.D.) will read "CYCLE DONE." If the door is not opened, the Phase 7 dual coin microprocessor controller (computer) will wait an initial 15 minutes delay time. Once the initial 15 minute delay time has expired, the fan will start and the basket (tumbler) will rotate (without heat) for an ON time of 15-seconds. When the fan and basket start, the display will read "WRINKLE GUARD". Immediately following the 15-second ON time, the control will go into a 5 minute OFF time at which point it will display "CYCLE DONE." The Phase 7 dual coin microprocessor controller (computer) will repeat this process of 15-seconds "ON" and 5 minutes "OFF" until either the doors are opened or 99 minutes have elapsed, whichever comes first. Prior to each ON time, there is a 3-beep warning that the fan and basket (tumbler) rotation are about to start. The beeps at the end of the Wrinkle Guard Cycle can be programmed to be ON/OFF.

SECTION V

SERVICE/PARTS INFORMATION

A. SERVICE

Only properly licensed or trained technicians should service the dryer. If service is required, contact the dealer from whom the equipment was purchased. If the dealer **cannot** be contacted or is unknown, contact the **Maytag Co.** for a dealer in your area.

NOTE: When contacting the **Maytag Co.**, be sure to give them the correct **model number** and **serial number** so that your inquiry is handled in an expeditious manner.

B. PARTS

Replacement parts **should be** purchased from the dealer from whom the **Maytag** equipment was purchased. If the dealer **cannot** be contacted or is unknown, contact the **Maytag Co.** for a dealer in your area.

NOTE: When ordering replacement parts from the **Maytag Co.**, be sure to give them the correct **model number** and **serial number** so that your parts order can be processed in an expeditious manner.

SECTION VI

WARRANTY INFORMATION

A. RETURNING WARRANTY CARDS

Before any dryer leaves the manufacturer, a warranty card is placed on the back side of the main door glass. These warranty cards are intended to serve the customer, where we record the individual installation date so as to extend the customer's warranty period.

IMPORTANT: A separate warranty card ***must be*** completed and returned for each individual dryer.

NOTE: Be sure to include the installation date when returning warranty card(s).

B. WARRANTY

For a copy of the manufacturer's commercial warranty covering your particular dryer(s), contact the dealer from whom you purchased the equipment and request a dryer warranty form. If the dealer **cannot** be contacted or is unknown, warranty information can be obtained from the **Maytag Co**.

NOTE: Whenever contacting the **Maytag Co.** for warranty information, be sure to have the dryer's **model number** and **serial number** available so that your inquiry can be handled in an expeditious manner.

SECTION VII

ROUTINE MAINTENANCE

A. CLEANING

A program and/or schedule **should be** established for periodic inspection, cleaning, and removal of lint from various areas of the dryer, as well as throughout the ductwork system. The frequency of cleaning can best be determined from experience at each location. Maximum operating efficiency is dependent upon proper air circulation. The accumulation of lint can restrict this airflow. If the guidelines in this section are met, this dryer will provide many years of efficient, trouble free, and most importantly, safe operation.

WARNING: LINT FROM MOST FABRICS IS HIGHLY COMBUSTIBLE. THE ACCUMULATION OF LINT CAN CREATE A POTENTIAL FIRE HAZARD.

WARNING: KEEP DRYER AREA CLEAR AND FREE FROM COMBUSTIBLE MATERIALS, GASOLINE, AND OTHER FLAMMABLE VAPORS AND LIQUIDS.

NOTE: Suggested time intervals shown are for average usage, which is considered six (6) to eight (8) operational (running) hours per day.

IMPORTANT: Dryer produces combustible lint and ***must be*** exhausted to the outdoors. Every 6 months, inspect the exhaust ducting and remove any lint build up.

SUGGESTED CLEANING SCHEDULE

DAILY (beginning of each work shift)

Clean lint from lint drawer/screen.

Inspect lint screen and replace if torn.

WEEKLY

Clean lint accumulation from around microprocessor temperature sensor probes and sensor bracket assemblies.

WARNING: TO AVOID HAZARD OF ELECTRICAL SHOCK, DISCONTINUE ELECTRICAL POWER SUPPLY TO THE DRYER.

90 DAYS

Inspect and remove lint accumulation in customer furnished exhaust ductwork system and from the dryer's internal exhaust ducting.

WARNING: THE ACCUMULATION OF LINT IN THE EXHAUST DUCTWORK CAN CREATE A POTENTIAL FIRE HAZARD.

WARNING: ***DO NOT*** OBSTRUCT THE FLOW OF COMBUSTION AIR AND VENTILATION AIR.

WARNING: **INSPECT AND REMOVE ANY LINT ACCUMULATION, WHICH CAN CAUSE THE BACK DRAFT DAMPER TO BIND OR STICK**.

NOTE: A back draft damper that is sticking partially closed can result in slow drying and shut down of the heat circuit safety switches and/or thermostats.

NOTE: When cleaning dryer cabinet(s), avoid using harsh abrasives. A product intended for the cleaning of appliances is recommended.

B. ADJUSTMENTS

7 DAYS AFTER INSTALLATION and EVERY 6 MONTHS THEREAFTER

Inspect bolts, nuts, screws, setscrews, grounding connections, and nonpermanent gas connections (unions, shutoff valves, and orifices). Motor and drive belts **should be** examined. Cracked or seriously frayed belt(s) **should be** replaced. Tighten loose belt(s) when necessary. Complete operational check of controls and valves. Complete operational check of **ALL** safety devices (door switches, lint drawer switch, sail switch, burner, and hi-limit thermostats).

C. LUBRICATION

The motor bearings, idler bearings, and under normal/most conditions the basket (tumbler) bearings are permanently lubricated. It is physically impossible to re-lubricate the basket (tumbler) bearings if you choose to do so, even though this practice is not necessary. Use Shell Alvania #2 grease or its equivalent. The basket (tumbler) bearings used in the dryer **DO NOT** have a grease fitting. Provisions are made in the bearing housing for the addition of a grease fitting, which can be obtained elsewhere, or from the **Maytag** dealer by ordering P/N 882159 (which includes two [2] grease fittings).

SECTION VIII

DATA LABEL INFORMATION

Contact **Maytag Co.**

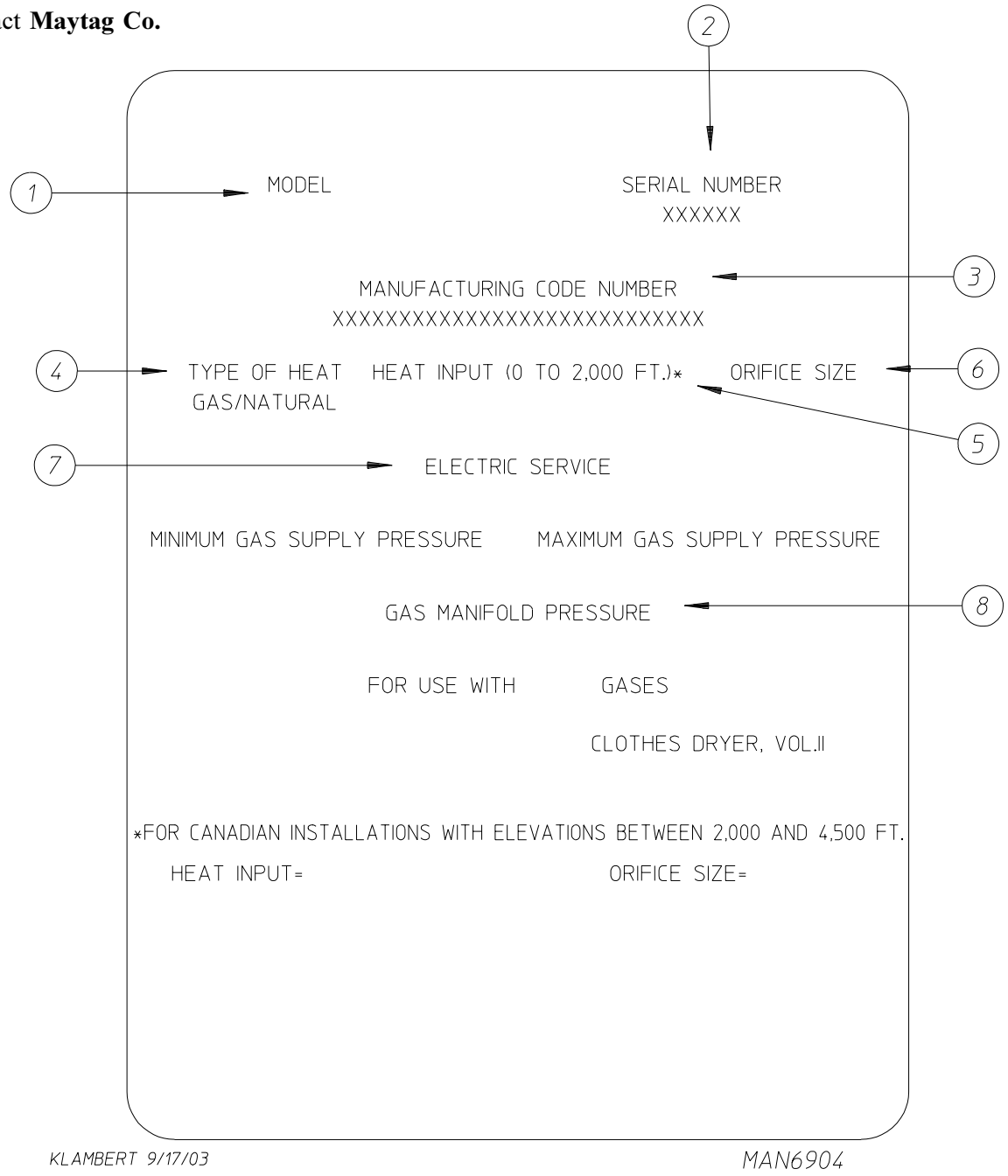

When contacting the **Maytag** dealer, certain information is required to ensure proper service/parts information. This information is on the data label, which is located in the gas train area (right inside wall near sail switch) behind the middle control (access) door. When contacting the **Maytag Co.**, please have the **model number** and **serial number** available.

THE DATA LABEL

1. **MODEL NUMBER**
   The model number is an **Maytag Co**. number, which describes the size of the dryer and the type of heat (gas, electric, or steam).

2. **SERIAL NUMBER**
   The serial number allows **Maytag** to gather information on your particular dryer.

3. **MANUFACTURING CODE NUMBER**
   The manufacturing code number is a number issued by **Maytag,** which describes **ALL** possible options on your particular model.

4. **TYPE OF HEAT**
   This describes the type of heat for your particular dryer: gas (either natural gas or liquid propane [L.P.] gas), electric, or steam.

5. **HEAT INPUT** (for GAS DRYERS)
   This describes the heat input in British Thermal Units per Hour (Btu/hr).

6. **ORIFICE SIZE** (for GAS DRYERS)
   Gives the number drill size used.

7. **ELECTRIC SERVICE**
   This describes the electric service for your particular model.

8. **GAS MANIFOLD PRESSURE** (for GAS DRYERS)
   This describes the manifold pressure taken at the gas valve tap.

SECTION IX

PROCEDURE FOR FUNCTIONAL CHECK OF REPLACEMENT COMPONENTS

KEYBOARD (TOUCH PAD) LAYOUT

1. Liquid Crystal Display
2. Top Pocket HI key
3. Top Pocket MED Key
4. Top Pocket LO Key
5. Top Pocket PAUSE Key
6. Bottom Pocket HI Key
7. Bottom Pocket MED Key
8. Bottom Pocket LO Key
9. Bottom Pocket PAUSE Key

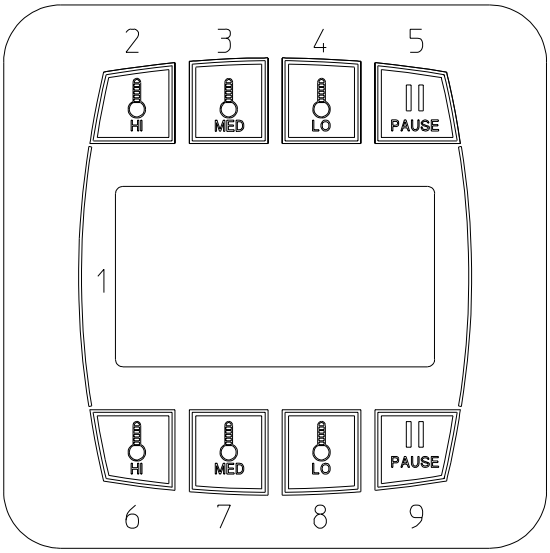

JM 9/22/03 MAN6874

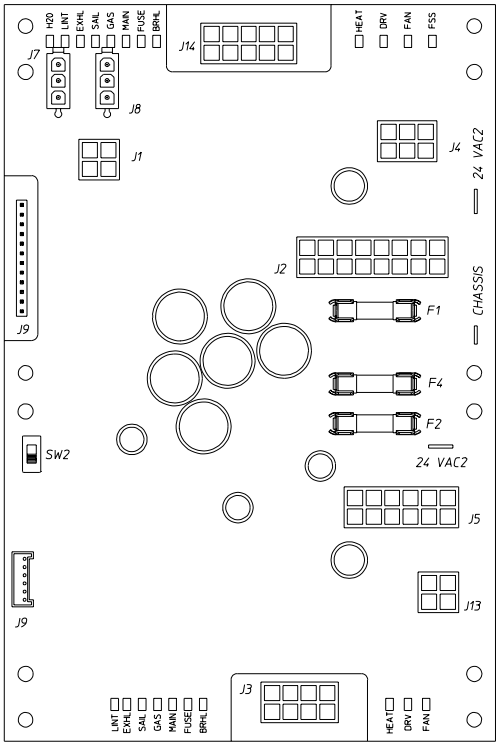

JM 9/22/03 MAN6920

1. For Models with Johnson Direct Spark Ignition (DSI) Controller (G760)

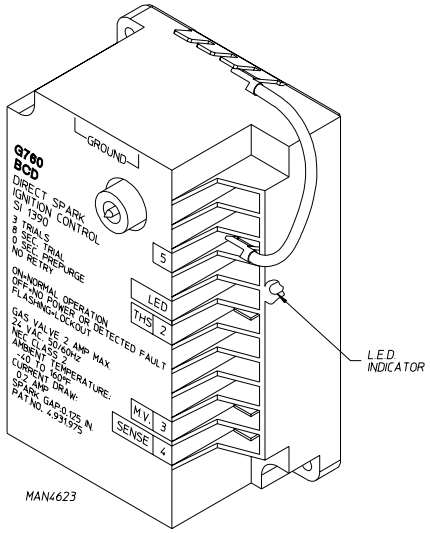

Theory of Operation:

Start the drying cycle. When the gas burner ignites within the chosen trial for ignition time (6-seconds), the flame sensor detects gas burner flame and signals the DSI module to keep the gas valve open as long as there is a call for heat. The DSI module will "LOCK OUT" if the gas burner flame is not sensed at the end of the trial for ignition period. The trial for ignition period will be repeated for a total of three (3) retries/trials (the initial try and two [2] more retries/trials). If the flame is not sensed at the end of the third retry/trial (inter-purge period of 30-seconds) the DSI module will "LOCK OUT" (light emitting diode [L.E.D.] diagnostic indicator flashes).

A steady L.E.D. indicator indicates normal operation.

No L.E.D. indicator indicates a power or an internal failure has occurred.

2. For Models with Fenwal Controls DSI Module (128937)

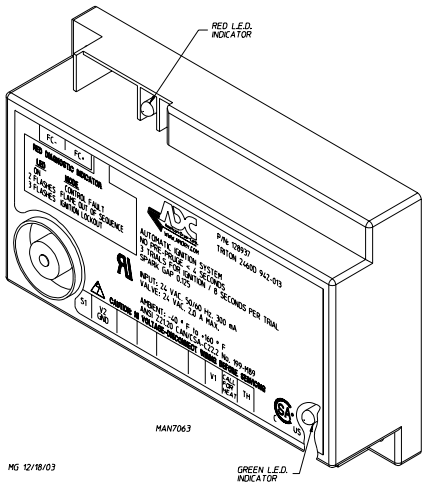

Theory of Operation:

Start the drying cycle. When the gas burner ignites within the chosen trial for ignition time (8-seconds), the flame sensor detects gas burner flame and signals the DSI module to keep the gas valve open as long as there is a call for heat. The DSI module will "LOCK OUT" if the gas burner flame is not sensed at the end of the trial for ignition period. The trial for ignition period will be repeated for a total of three (3) retries/trials (the initial try and two [2] more retries/trials). If the flame is not sensed at the end of the third retry/trial (inter-purge period of 30-seconds), the DSI module will "LOCK OUT" (a red L.E.D. diagnostic indicator will flash).

An unlit red L.E.D. diagnostic indicator indicates normal operation.

A lit green L.E.D. diagnostic indicator indicates dryer controller is calling for heat and that **ALL** interlocks have been satisfied.

Optional Exhaust Duct Kit

P/N 882035

ITEM #	QTY	P/N	DESCRIPTION
1	1	143600	10” X 6” X 6”, Y DUCT
2	1	143519	FLEX DUCT 6” x 4’ LONG
3	1	143509	FLEX DUCT 6” x 8’ LONG
4	2	143536	45º ELBOW 6”
NOT ILLUSTRATED	12	150300	#10 x 1/2” SELF-DRILLING SCREW
NOT ILLUSTRATED	12’	117505	ALUMINUM DUCT TAPE

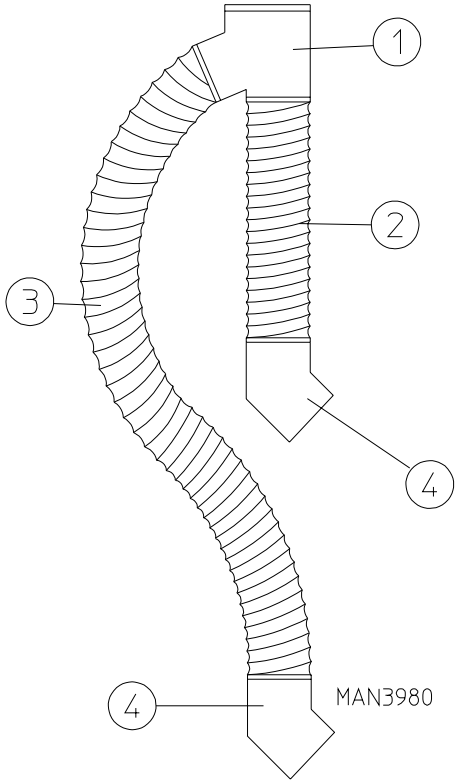

Optional Gas Piping Kit

P/N 880128

ITEM #	QTY	P/N	DESCRIPTION
1	2	142600	1/2" UNION
2	2	142700	1/2" CLOSE NIPPLE
3	1	142500	1/2" x 90° ELBOW
4	1	142824	1/2" x 37 1/4" NIPPLE
5	1	142505	3/4" x 1/2" x 1/2" TEE
6	1	142821	3/4" x 36" NIPPLE
7	2	142814	1/2" x 2 1/2" NIPPLE
8	2	143001	1/2" COUPLING

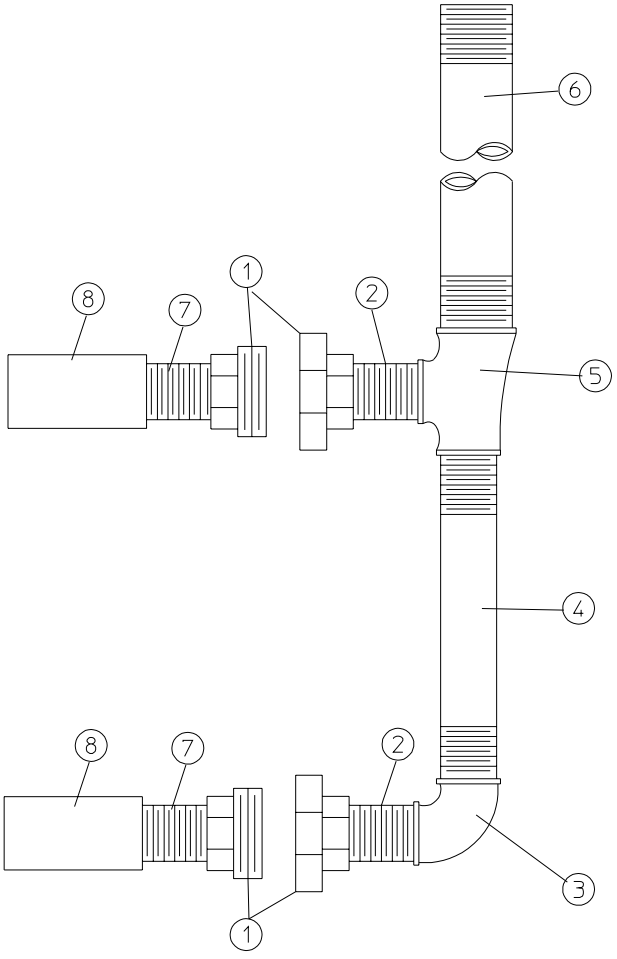

MAN5710

CALBERT 03/14/01


MAYTAG