24"W. 524 MODEL DISHWASHER

Viking Premiere Dishwasher – VDWU524/VDWU524WS/FDWU524/FDWU524WS

MULTI-LEVEL WASHING

- Variable pressure wash adjusts water volume, pressure, and temperature according to load size and soil levels
- Multi-level washing with stainless steel bottom spray arm, upper spray arm and top nozzle ensures clean dishes
- Intensive lower rack washing with Extra Spray Arm
- Turbidity sensor monitors the soil level of the dishes for superior quality
- Triple filtration system removes the smallest particles for clean water circulation
- Flow-through water heater is concealed to provide a safer alternative to exposed heaters

TURBO FAN DRY

- Fan circulates air for efficient drying performance

QUIET CLEAN™ PERFORMANCE PACKAGE - 42dB

- Three layers of insulation – bitumen, cotton, and full side walls create one of the quietest dishwashers on the market
- Brushless discharge and circulation motor

LOADING

- Industry-leading heavy gauge top and bottom dish baskets hold even the heaviest dishes
- Upper Smart FullSize™ Rack is designed to allow cleaning of cutlery while washing tall items simultaneously in upper rack
- Holds up to 16 international place settings along with silverware and cutlery
- Top rack is 3-positon adjustable with or without dishes for versatile loading
- Telescopic rail provides smooth motion for upper basket
- Adjustable stemware shelves can be used for holding ladles or other small utensils
- Foldable tines provide versatility for the loading of pots, pans, and uniquely sized items in top and bottom racks
- Bottom rack has eight and top rack has six split foldable tines with variable setting from flat to vertical
- Sliding cutlery basket can be moved horizontally to any position

FEATURES

- LCD screen with remaining time indicator
- Touch button direct access control
- Cycle indicator light on floor
- Energy Star Qualified



CYCLES/OPTIONS

- Cycles
  - Pots/Pans Plus – Extra-heavy soil level
  - GlassCare
  - Auto – determines the amount of water and temperature needed
  - CombiClean – washes delicate items in upper basket and heavier soiled items in lower basket
  - Regular Wash – Normal soil level
  - HourWash
  - Quick Wash – 35 Minutes!
  - Rinse/Hold – Pre-rinse dishes clean
- Options
  - Express Function – Sensor detects rinse aid and automatically sets drying cycle duration
  - Sanitize Function – Raises water temperature in final rinse to meet NSF requirements
  - High Gloss – Provides superior drying performance
  - Intense Wash – Helps wash heavily soiled dishes
  - Delay Start – Allows delayed activation for up to 24 hours

MODELS

- VDWU524SS - 24"W. Dishwasher
- VDWU524WSSS - 24"W. Dishwasher with water softener
- FDWU524 - 24"W. Custom Panel Dishwasher
- FDWU524WS - 24"W. Custom Panel Dishwasher with water softener

ACCESSORIES

- PDDP524 Viking door panel - for use with FDWU models in exclusive color finishes
- PHK23 – Professional Handle Kit - for use with FDWU models

COLOR FINISHES

- Available with wrapped Stainless-Steel Door Panel installed
- PDDP524 available in exclusive color finishes Black (BK), White (WH), Apple Red (AR), Burgundy (BU), Cobalt Blue (CB), Graphite Gray (GG)



WARRANTY

- One-year full – complete product
- Ninety-day full – cosmetic parts such as glass, painted items, and decorative items
- Lifetime limited – tank and inner door
- Five-year limited – electronic controls, racks, motor/pump assemblies and water distribution system

24"W. 524 MODEL DISHWASHER

Viking Premiere Dishwasher – VDWU524/VDWU524WS/FDWU524/FDWU524WS

24"W. DISHWASHER	
DESCRIPTION	VDWU524/VDWU524WS/FDWU524/FDWU524WS
Overall Width	23-9/16" (59.8 cm)
Overall Height from Floor	33-7/8" (86.0 cm) minimum to 35 7/8" (91.1 cm) maximum
Overall Depth	To front of door panel: 22 3/16" (56.4 cm)
Cutout Width	24" (61.0 cm)
Cutout Height	34" (86.4 cm) minimum to 36 1/4" (92.0 cm) maximum
Cutout Depth	24" (61.0 cm)
Electrical Requirements	12.0 amps, 120V/60Hz; 4" (120cm) electrical cord with supplied with unit
Water-Heating Element Rating	1100 watts
Inlet Water Temperature	120˚F (49˚C) required
Drain Hose	6.4' (1.9m) drain hose provided
Drain Hose High Loop Required	Height from floor – 28" (71.0 cm)
Approximate Shipping Weight	97 lb. (44 kg)

Please do not prepare installation from brochure data only. See installation instructions for important clearance/installation information.

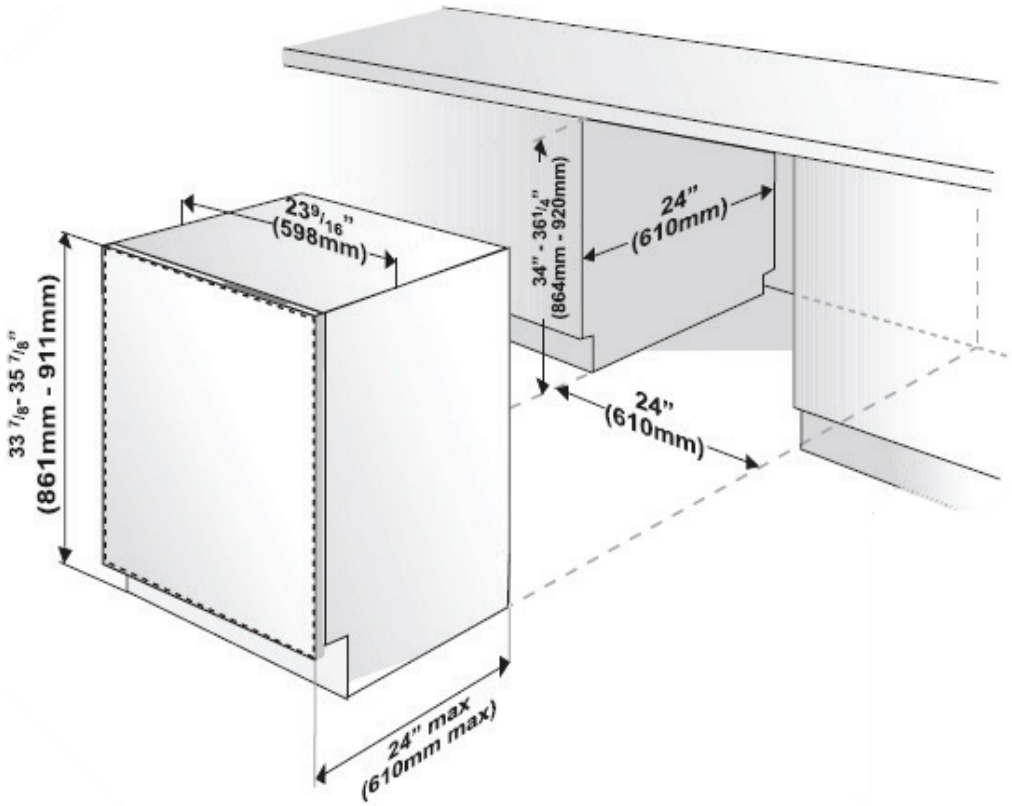

VIKING RANGE, LLC 111 FRONT STREET GREENWOOD, MISSISSIPPI 38930 USA

For detailed product information, model numbers, or to request a quote call 1-888-845-4641 or visit vikingrange.com

© 2018 Viking Range, LLC All rights reserved. Specifications subject to change without notice.