ENGLISH

FORNO

Alta Qualita

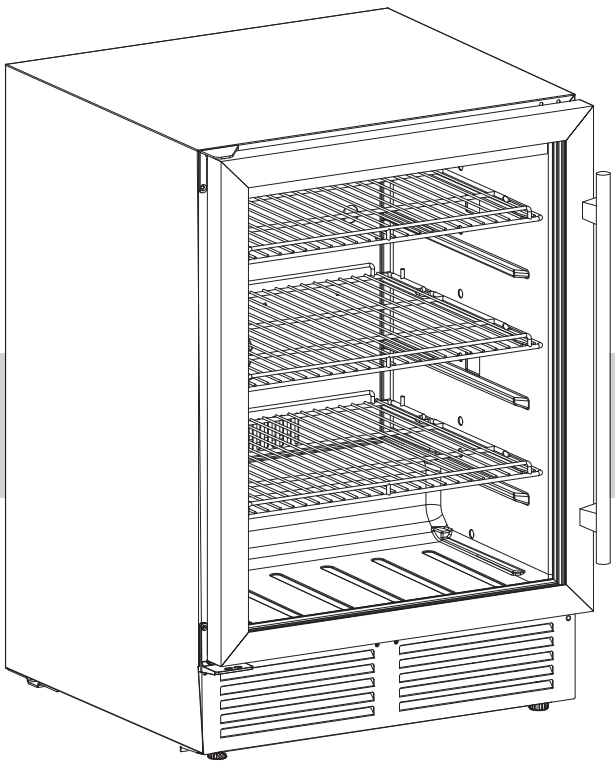

BEVERAGE COOLER
MODEL NUMBER SERIES

FWCDR6665-24S
FWCDR6665-24WHT
FWCDR6665-24BLK

INSTRUCTION MANUAL & INSTALLATION GUIDE

Read these instructions carefully before using your appliance, and keep it carefully.
If you follow the instructions, your appliance will provide you with many years of good service.

TABLE OF CONTENTS

Customer Care	5
Warning	6
Important Safety	7
Product Dimension	10
Cutout	11
Names of Parts and Accessories	12
Installations:	
• Handle	13
Operating Instruction	13
Care and Maintenance	
• Cleaning your cooler	14
• Moving the cooler	14
• Racking Configuration	14
Troubleshooting	15
Wire Diagram	16
Warranty	17

BEVERAGE COOLER

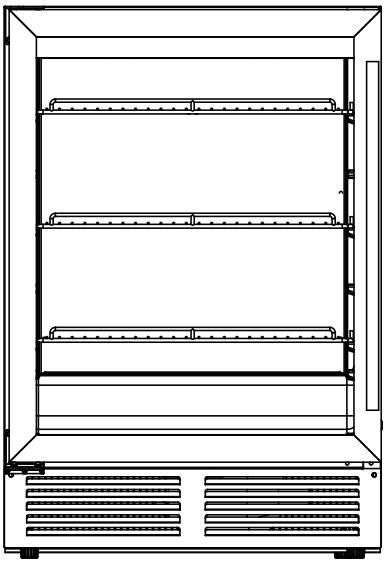

MODEL NUMBER SERIES

FWCDR6665-24S
FWCDR6665-24WHT
FWCDR6665-24BLK

Customer Care

Thank you for purchasing a Frono product. Please read the entire instruction manual before operating your new appliance for the first time. Whether you are an occasional user or an expert, it will be beneficial to familiarize yourself with the safety practices, features, operation and care recommendations of your appliance.

Both the model and serial number are listed inside the product. For warranty purposes, you will also need the date of purchase .

Record this information below for future reference.

Model And Serial Number Location

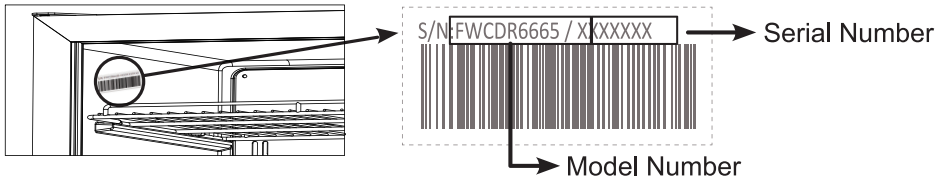

Product Information	Service Information
Model Number : _____	Use these numbers in any correspondence or services calls concerning your product.
Serial Number : _____	If you received a damaged product, immediately contact Forno.
Date of Purchase :_____	To save time and money, before you call for serviced, check the troubleshooting guide. It listed the causes of minor operation problems that you can correct yourself.
Purchase Address And Phone : _____	
_____	
_____	

"Need some quick help? Simply scan the qr code and get access to our fast support form. We're always here to assist you with any questions or concerns you may have. So, don't hesitate to reach out!"

Services in Canada and Untied States

Keep the instruction manual handy to answer your questions. If you don't understand something or need more assistance, please visit our website for fast support. Please provide us your name, number, address,serial number of the product that troubleshooting, proof of purchase, and a short description of the issue. A customer service representative will contact you as soon as possible. All warranty work needs to be authorized by FORNO customer service. All our authorized service providers are carefully selected and rigorously trained by us.

WARNING

FOR YOUR SAFETY

Your safety and the safety of others are very important.

We have provided many important safety messages in this manual and on your appliance. Always read and obey all safety messages.

This is the safety alert symbol. This symbol alerts you to potential hazards that can kill or hurt you and others. Al l safety messages will follow the safety alert symbol and either the word “DANGER,” “WARNING” or “CAUTION.” These words mean:

DANGER

- You can be killed or seriously injured if you don’t immediately follow instructions.

WARNING

- You can be killed or seriously injured if you don’t follow instructions.

CAUTION

- A potentially hazardous situation which, if not avoided, could result in minor or moderate injury.

All safety messages will tell you what the potential hazard is, tell you how to reduce the chance of injury, and tell you what can happen if the instructions are not followed.

WARNING : This product can expose you to chemicals including [Lead, lead and lead compound, which is [are] known to the state of California to cause cancer and birth defects or other reproductive harm. For more information go to www.P65Warning.ca.gov.

Important Safety Instructions

- The appliance is intended to be used exclusively for storage of soft drinks.
- Make sure the voltage/current marked on the rating label corresponds with your supply voltage. Plug into a grounded 3-pin outlet, do not remove grounding pin, do not use an adapter, and do not use an extension cord.
- Do not connect or disconnect the electric plug when your hands are wet.
- Ensure enough peoples to move and install the appliance to avoid any damage to the appliance or injury to the peoples.
- To ensure proper ventilation for the appliance, the front of the unit must be completely unobstructed. Locate the unit away from direct sunlight and sources of heat (stove, heater, radiator, etc.).
- This appliance is not intended for use by young children.
- Do not use this appliance for other than its intended purpose.
- The use of attachments not recommended by the manufacturer may be hazardous.
- The symbol on the product or its packaging indicates that this product is not to be handled as normal household waste and it is to be taken to a recycling collection point for electrical and electronic goods.
- Component parts shall be replaced with like components and that servicing shall be done by factory authorized service personnel.

IMPORTANT SAFETY INFORMATION - DANGER! RISK OF CHILD ENTRAPMENT
Before you throw away your old appliance:

- Take off the doors.
- Leave the shelves in place so that children may not easily climb inside.
- Make sure the coolant circuit, particularly the heat exchanger at the back/bottom of the unit not be damaged.

⚠ CAUTION

To prevent a child from being entrapped, keep out of reach of children and not in the vicinity or appliance.

Refrigerants:
R600a is a kind of high performance green refrigerants, derived from natural ingredients, does not damage the ozone layer, without the greenhouse effect. Its characteristic is the strong cooling performance, low power consumption. All refrigeration products contain refrigerants, which under federal law must be removed prior to product disposal. If you are getting rid of an old refrigeration product, check with a qualified disposal company for instructions.

This appliance must be grounded. In the event of an electrical short circuit, grounding reduces the risk of electric shock by providing an escape wire for the electric current. This appliance is equipped with a cord having a grounding wire with a grounding plug. The plug must be plugged into an outlet that is properly installed and grounded.

⚠ WARNING:

Improper use of grounding can result in a risk of electric shock.

1. Consult a qualified electrician or serviceman if the grounding instructions are not completely understood or if doubt exists as to whether the appliance is properly grounded.

2. If it is necessary to use an extension cord, use only a 3-wire extension cord that has a 3-blade grounding plug, and a 3- slot receptacle that will accept the plug on the appliance. The marked electrical rating of the extension cord s hall be not less than 120V, 5A.

Three-pronged (grounding plug)

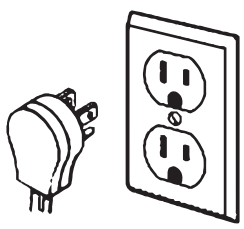

Properly polarized and grounded outlet

Important Safety Instructions

MOVING THE APPLIANCE

1. Turn off the beverage cooler and unplug from the outlet.
2. Securely tape down all loose items inside.
3. Close the door.
4. Do not lift, pull the door or door handle during transportation.
5. When moving, the appliance can not be tilted over 45 degrees as possible damage to the sealed system could occur.
6. Take care to avoid strong vibration or impact to the appliance.
7. When moving the beverage cooler , do take care and avoid to damage the refrigerant tube (which is located at the back of the unit), risk of fire or explosion.

SAFETY TIPS

Before using this appliance, it must be properly positioned and installed as described in this manual, so please read carefully. To reduce the risk of fire, electrical shock or injury when using the appliance, follow these basic precautions.

⚠ WARNING ⚠

To ensure your safety and the longevity of your appliance, it is important to adhere to these guidelines:

- Plug your appliance into a grounded outlet. Don't remove the third ground prong from the power cord, utilize an adapter, or use an extension cord.
- Consider using a separate circuit that only powers your appliance. Avoid outlets that are controlled by a switch or pull chain.
- Avoid using flammable fluids to clean your appliance parts. Do not store or use gasoline or other flammable materials near any appliance. The fumes can create a fire hazard or explosion.
- Before cleaning or servicing your appliance, disconnect the power or unplug it. Failure to do so can result in electrical shock or death.
- It is not recommended to repair or replace any part of your appliance unless it is specifically recommended in the manual. Seek out the assistance of a qualified technician for any other servicing needs.
- To avoid back or other injuries, it is essential to have at least two people move and install the appliance.
- Proper ventilation is crucial for your appliance's performance. Ensure that the front of the unit is entirely unobstructed, and select a well-ventilated area with temperatures between 60°F (16°C) and 90°F (32°C).
- Install the appliance in an area that offers protection against the elements, such as wind, rain, water spray, or drips.
- The appliance should not be placed near high heat sources like ovens, grills, or areas of extreme cold.

State and local codes must be followed when installing the appliance. A properly grounded electrical supply (120VAC only, 60 Hz) in accordance with the National Electrical Code and local ordinances is required for installation.

- Do not kink or pinch the power supply cord.
- The size of the fuse (or circuit breaker) should be 15 amperes.

The appliance must be leveled properly to function correctly. You may need to adjust it several times to achieve the correct level.

Children should never be allowed to operate, play with or crawl inside the appliance. To prevent child entrapment and suffocation, old beverage cooler should have their doors removed and the shelves left in place. Do not use solvent-based cleansers or abrasives on the interior of the appliance as they may damage or discolor it.
To avoid potential safety hazards, it is strongly recommended that you do not use an extension cord with this appliance.

If the appliance is going to be used in an area that is prone to power surges/outages, it is suggested that you use a power surge protector. The surge protector must have a surge block high enough to protect the appliance it is connected to. Damages due to power surges are not considered a manufacturer-covered defect and will void your product warranty.

Important Safety Instructions

The power cord should be secured behind the appliance and not left exposed or dangling to prevent accidental injury. Never unplug the appliance by pulling the power cord. Always grip the plug firmly and pull straight out from the receptacle. Repair or replace immediately all power cords that have become frayed or otherwise damaged. Do not use a cord with cracks or abrasion damage along its length or at either end. When moving the appliance, be careful not to damage the power cord.

- Do not use this appliance for purposes other than its intended purpose.
- Failure to follow these safety instructions may result in extensive product damage, serious personal injury, or death.
- Do not store explosive substances such as aerosol cans with a flammable propellant in this appliance.

This appliance is intended to be used in household and similar applications, including staff kitchen areas in shops, offices, and other working environments; farmhouses; hotels, motels, and other residential type environments; bed and breakfast type environments; catering and similar non-retail applications. If the supply cord is damaged, it must be replaced by the manufacturer, its service agent, or similarly qualified persons to avoid hazards.

The following requirements shall be followed at all times when using the beverage cooler.

1. Use strictly in accordance with the provisions of the beverage cabinet.
2. Do not pull the plug out of the socket by holding the power cord; instead, pull it out from the wall socket by holding the plug.
3. If the power cord is broken, please repair or replace it immediately. Do not use a cracked or aged power cord.
4. Children are not allowed to climb the cabinet to avoid damaging the cabinet and causing harm to the body.
5. Do not use power distribution.
6. Danger warning:
    - This product is beverage cooler, and it is strictly prohibited to store inflammable, explosive, corrosive, toxic, radiation, and other dangerous goods.
    - When disposing of the old beverage cabinet, please remove the cabinet door and place the cabinet shelf where children cannot easily access it.

Product Dimension

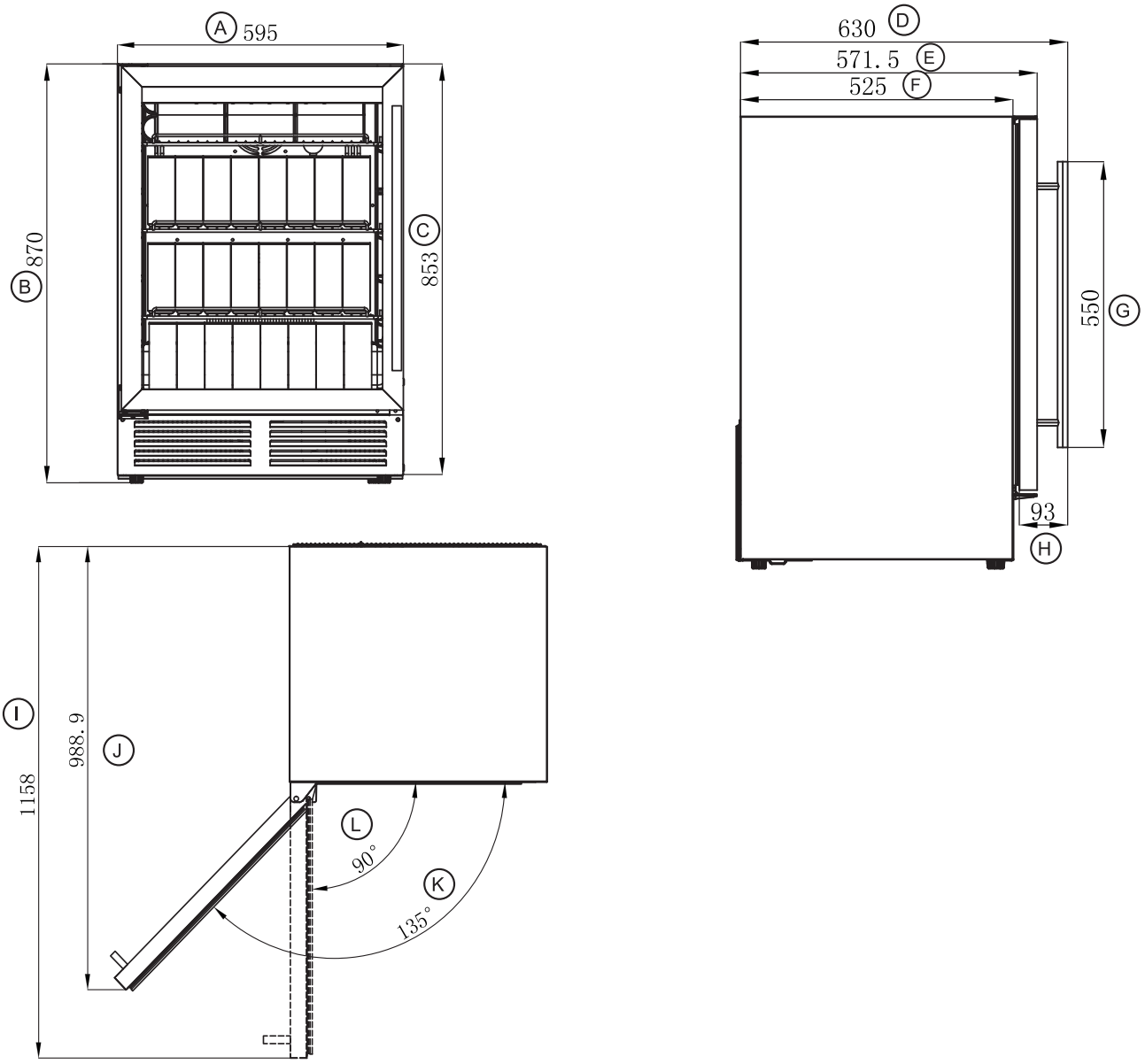

A	B	C	D	E	F
Overall Width	**Overall Height** (Hing to foot-on maximum)	**Height** (Top to bottom)	**Depth** Back to handle	**Depth** (Back to door)	**Height** (Back to front frame)
23.43”	34.25”	33.58”	24.8”	22.5”	20.67”
59.5cm	87cm	85.3cm	63cm	57.15cm	52.5cm

G	H	I	J	K	L
Height of Handle	**Width of handle** (door with handle)	**Depth** (Door open halfway)	**Depth** (Door open Fully)	**Opening** (Door open Fully)	**Opening** (Door open halfway)
21.65”	3.6”	45.59”	78.3”	135°	90°
55cm	9.3cm	115.8cm	98.89cm		

Product Dimension (continued)

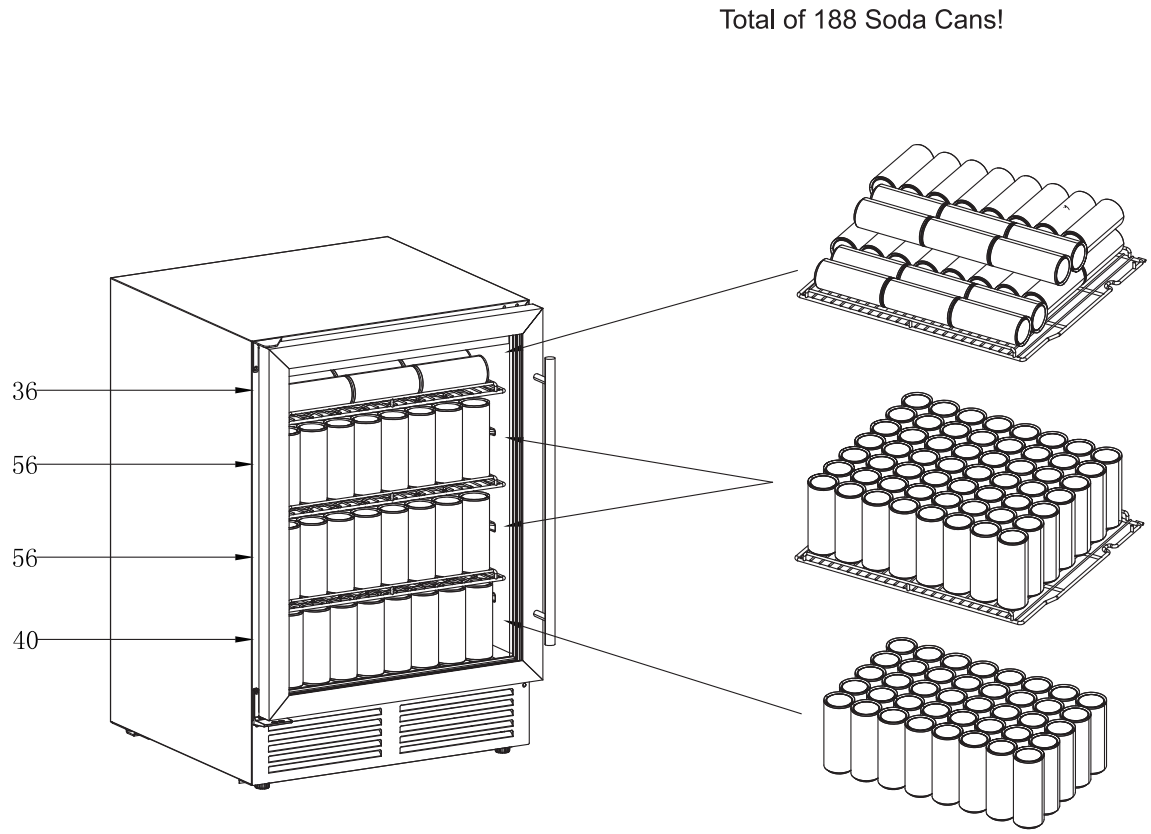

Cutout

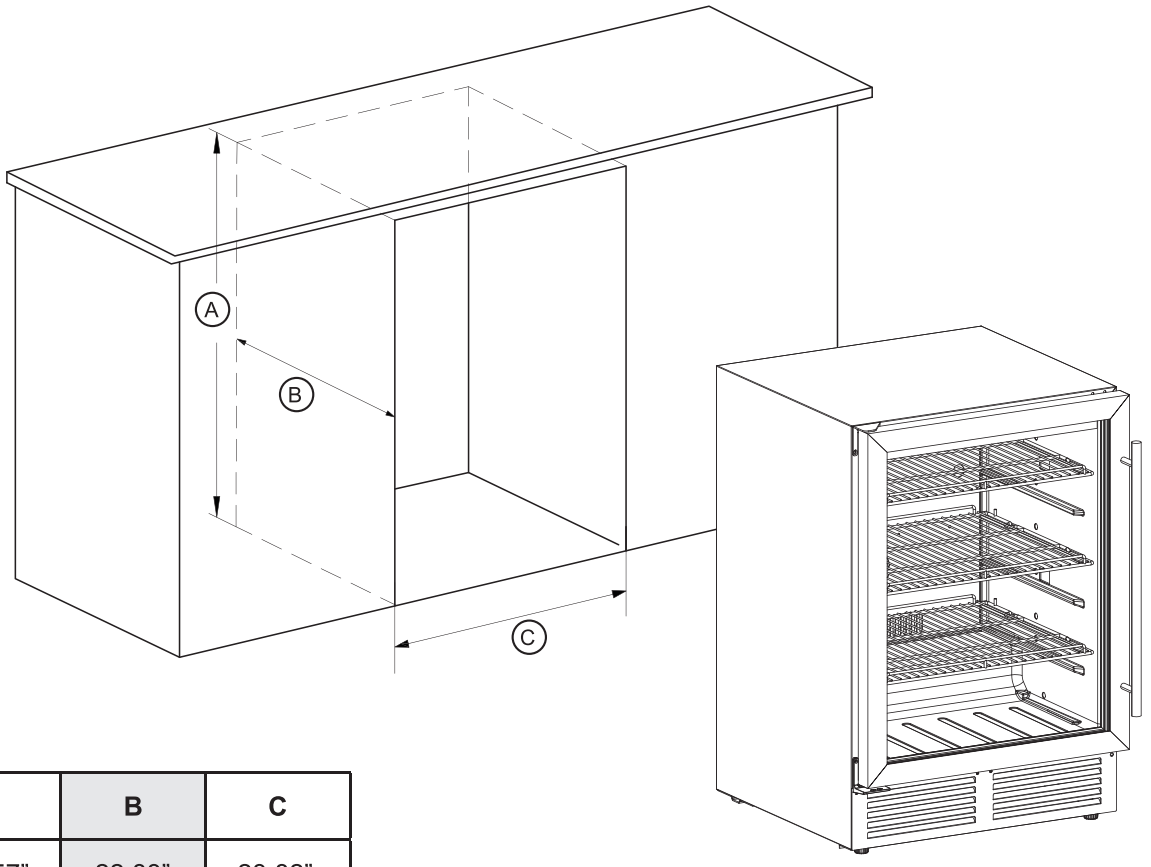

A	B	C
34.57”	22.83”	23.82”
87.8cm	58cm	60.5cm

Names of Parts and Accessories

Numbers	Parts
1	Top hinge
2	Control panel
3	Metal shelf
4	Handle
5	Glass door
6	Leveling legs
7	Bottom Grill

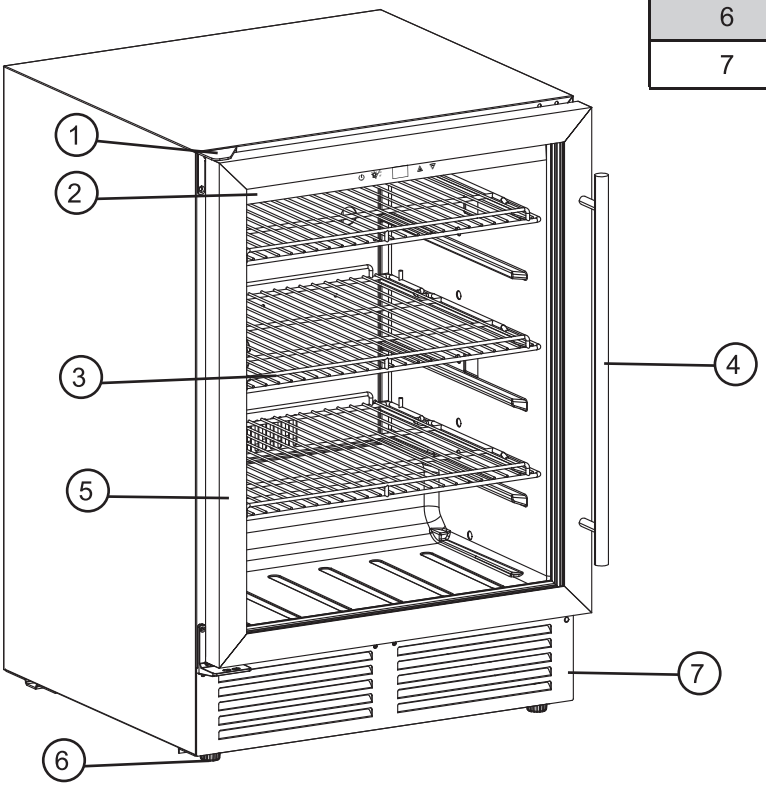

Supplied Parts	
 1x Hexagon wrench	 2x Screws for the handle
 1x Handle	 Logo

Installing The Handle

1. Locate the handle over the pins on the door panel.
2. Fix the handle by tighten the screw.

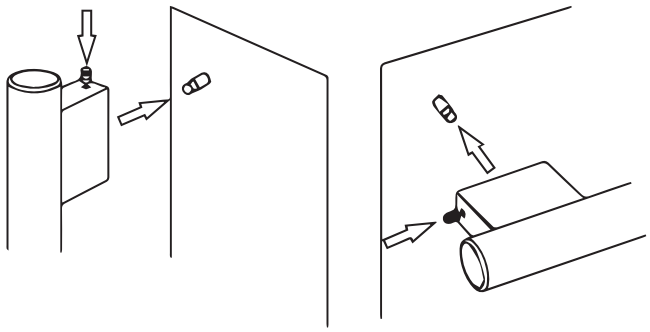

Operating Instruction

The cooler should be placed in an area where the ambient temperature range is between 18-26 °C (64.4° F - 78.8° F). If the ambient temperature is above or below this range, the performance of the unit may be affected. For example, placing your unit in extreme cold or hot conditions may cause interior temperatures to fluctuate.

USING THE CONTROL PANEL

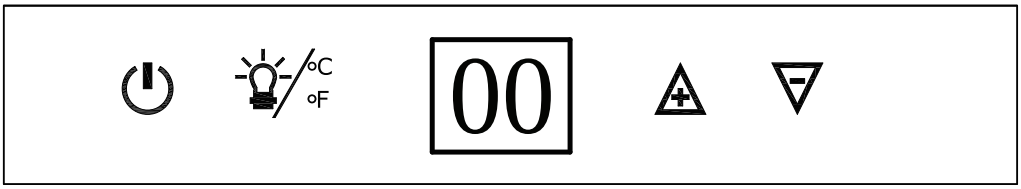

Symbols	Description
	Power button. One press to turn on the cooler. Press an d hold it for 3 second to turn OFF the cooler.
	Press to increase or decrease the temperature.
	Temperature display. Temperature setting range：3℃-18℃/37℉-64℉
	Turns the Interior Light ON and OFF. To toggle temperature between Fahrenheit and Celsius, hold button for 3 seconds.

IMPORTANT:
During a power interruption, all previous temperature settings are automatically saved, and each compartment returns to its previous temperature setting. If the unit is unplugged, loses power, or is turned off, wait 3 to 5 minutes before restarting. Restarting before this time may hinder the beverage cooler from starting. When using the beverage cooler for the first time or after a prolonged shutdown, there might be a few degrees of variance between your selected temperature and the one on the LED display for the initial hours of operation. After a few hours, the temperature will stabilize to the displayed setting.

Care and Maintenance

CLEANING YOUR COOLER:
For a thorough deep cleaning, adhere to the following steps:

1. Power down, unplug, and empty the appliance, removing all shelves.
2. Clean the inside with a mix of warm water and 2 tablespoons of baking soda per quart of water. Wash shelves with mild detergent.
3. Wash shelves with a mild detergent solution.
4. Wring excess water from the sponge when cleaning controls or electrical parts.
5. When cleaning control areas or electrical parts, ensure to wring, excess the water from the sponge or cloth.
6. Dust the front grill and back of the unit twice a year, ensuring the power is off.
7. For optimal longevity, perform a thorough yearly cleaning of both the inside and outside of the unit.

MOVING YOUR COOLER:
1. Remove all bottles from inside the unit.
2. Securely tape down any loose items, such as shelves, inside the appliance, and tape the door shut.
3. Turn the adjustable leg up to the base to prevent damage during transportation.
4. Ensure the appliance remains secure in the upright position during transit.
5. Protect the exterior of the appliance by covering it with a blanket or a similar protective item.

WIRED SHELVES:
The appliance is equipped with three wired shelves. You can remove the shelf by lift up and pull it out smoothly. To prevent damaging the door gasket, make sure to have the door all the way opened when pulling the bottom shelf out .
For easy access to the storage content, you can pull the shelf approximately 30% out of the rail compartment, however this unit was designed with a stopper on each side of the shelf track to prevent bottles from falling.

TO REMOVE A SHELF :
- To remove the shelves from the track, as shown in figure.

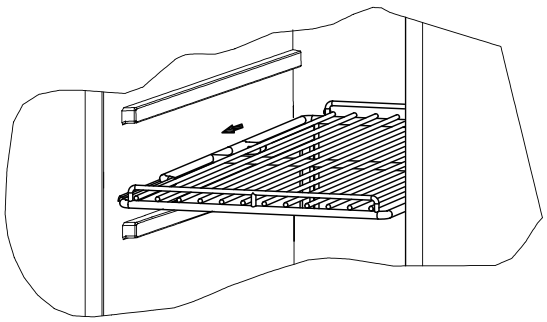

Troubleshooting

There are many common issues you may experience with your beverage cooler that can be solved very easily, without the need of a service call. Try the tips below to troubleshoot your unit should you experience any problems:

PROBLEM	POSSIBLE CAUSES
Cooler does not operate	Not plugged in or the appliance is turned off The circuit breaker tripped or a fuse has blown out
Cooler is not cold enough	• Check the temperature control setting • External environment may require a higher setting • The door is opened too often • The door is not closed completely • The door gasket is not sealing properly
Cooler is turning on and off frequently	• The room temperature is hotter than normal. • The door is opened too often. • The door is not closed completely. • The temperature control is not set correctly. • The door gasket does not seal properly.
The light does not work	• Not plugged in. • The circuit breaker tripped or a fuse has blown. • The light bulb has burned out. • The light button is “OFF” .
Vibrations	Check to assure that the beverage cooler is on a level surface.
The beverage cooler seems to make too much noise	• A faint humming noise may come from the flow of the refrigerant, which is normal. • As each cycle ends, you may hear gurgling sounds caused by the flow of refrigerator in your beverage cooler. • Contraction and expansion of the inside walls may cause popping and crackling noises. • The beverage cooler is not on a level surface.
The door will not close properly	• The beverage cooler is not on a level surface. • The gasket is dirty. • The shelves are out of position.
Condensation forming inside of the cabinet	• Condensation occurs when too much ambient air gets into the cabinet. Wipe off the doors and walls and leave door closed as long as possible. • Check that the door gasket and the charcoal filter are properly in place.

Wire Diagram

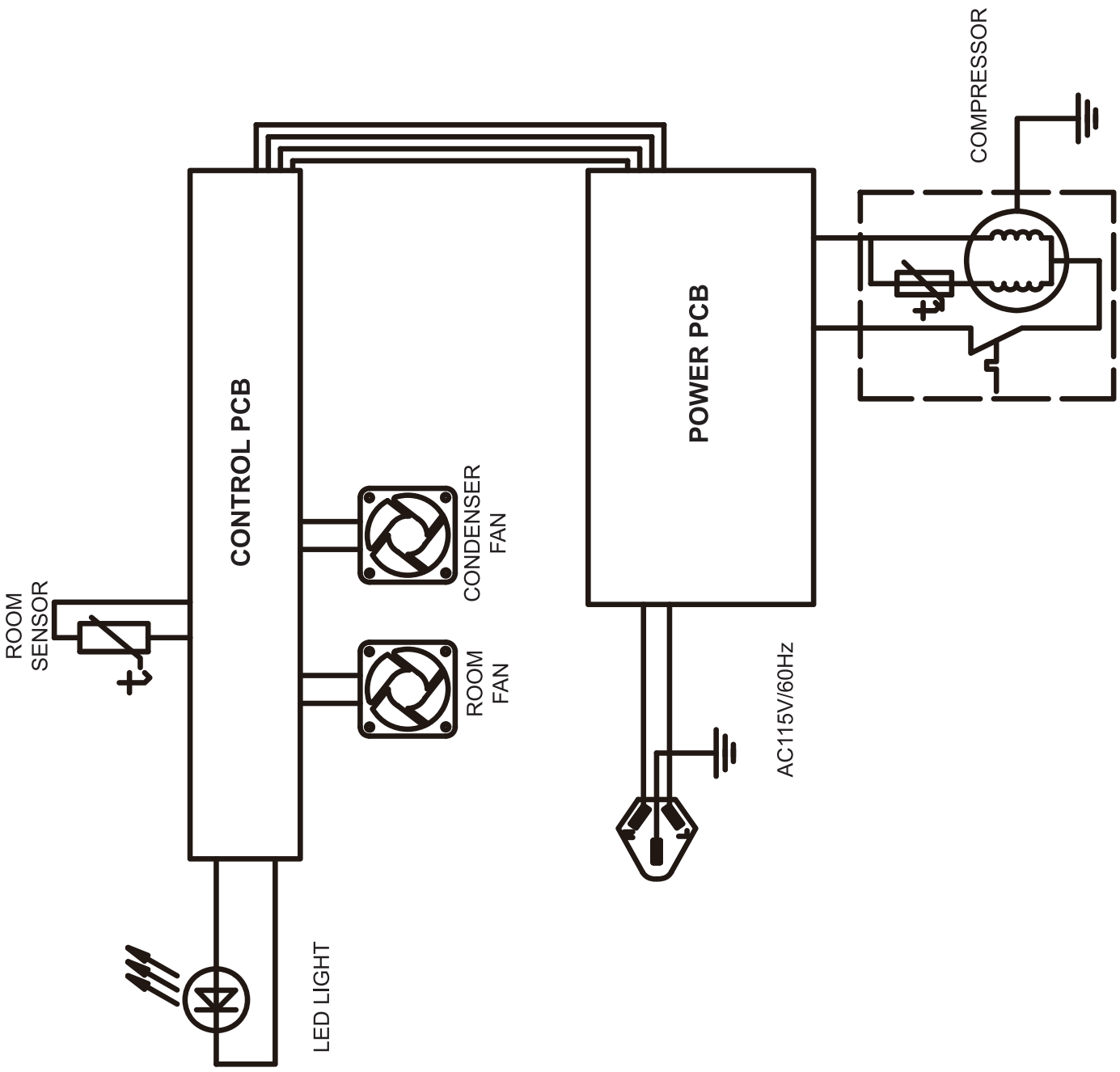

Warranty

What this limited warranty covers:
The Warranty coverage provided by Forno Appliances in this statement applies exclusively to the original Forno appliance (“Product”) sold to the consumer (“Purchaser”) by an authorized Forno dealer/distributor/retailer, purchased and installed in the United States or Canada, and which has always remained within the original country of purchase (the United States or Canada). Warranty coverage is activated on the date of the Product’s original retail purchase and has a duration of two (2) years.

Warranty coverage is non-transferable. In the event of replacement of parts or of the entire product, the replacement Product (or parts) shall assume the remaining original Warranty activated with the original retail purchase document. This Warranty shall not be extended with respect to such replacement. Forno Appliances will repair or replace any component/part which fails or proves defective due to materials and/or workmanship within 2 years of the date of the original retail purchase and under conditions of ordinary residential, non-commercial use. Repair or replacement will be free of charge, including labor at standard rates and shipping expenses. Purchaser is responsible for making the Product reasonably accessible for service. Repair service must be performed by a Forno Authorized Service company during normal working hours.

Important
Retain proof of original purchase to establish warranty period. Forno’s liability on any claim of any kind, with respect to the goods and/or services provided, shall in no event exceed the value of the goods or service or part there of which has given rise to the claim.

30-Day Cosmetic Warranty
The Purchaser must inspect the product at the time of delivery. Forno warrants that the Product is free from manufacturing defects in materials and workmanship for a period of thirty (30) days from date of the original retail purchase of the Product.

This coverage includes:
- Paint blemishes
- Chips
- Macroscopic finish defects

Cosmetic warranty does NOT cover:
- Issues resulting from incorrect transport, handling and/ or installation (e.g.: dents, broken, warped or deformed structures or components, cracked or otherwise damaged glass components);
- Slight color variations on painted/enameled components;
- Differences caused by natural or artificial lighting, location or other analogous factors; > stains/corrosion/ discoloration caused by external substances and/ or environmental factors; > labor costs, display, floor, B-stock, out- of-box,“as is” appliances and demo units.

How to receive service
To receive warranty services, the Purchaser must contact the Forno Support department in order to determine the problem and the required service procedures. Troubleshooting with a customer service representative will be necessary before moving forward with the service. Model number, serial number and date of original retail purchase will be requested.

Warranty Exclusions: What Is Not Covered.
- Use of the Product in any non-residential, commercial application.
- Use of the Product for anything other than its intended purpose.
- Repair services provided by anyone other than a Forno Authorized Service agency.
- Damages or repair services to correct services provided by unauthorized parties or the use of unauthorized parts.
- Installation not in accordance with local/state/city/county fire codes, electrical codes, gas codes, plumbing codes, building codes, laws or regulations.
- Defects or damage due to improper storage of the Product.
- Defects, damage or missing parts on products sold out of the original factory packaging or from displays. > Service calls or repairs to correct an incorrect installation of the Product and/or related accessories.
- Replacement of parts/service calls to connect, convert or otherwise repair the electrical wiring and/or gas line in order to properly use the product.
- Replacement of parts/service calls to provide instructions and information on the use of the Product.
- Replacement of parts/service calls to correct issues arising from the product being used in a manner other than what is normal and customary for residential use.
- Replacement of parts/service calls due to wear and tear of components such as seals, knobs, pan supports, shelving, cutlery baskets, buttons, touch displays, scratched or broken ceramic-glass tops.
- Replacement of parts/service calls for lack of/improper maintenance, including but not limited to: build up of residues, stains, scratches, discoloration, corrosion.
- Defects and damages arising from accidents, alteration, misuse, abuse or improper installation.
- Defects and damages arising from Product transport, logistics and handling. Inspection of the product must be made at time of delivery. Following receipt and inspection, the selling dealer/delivery company must be notified of any issues arising from handling, transport and logistics.
- Defects and damages arising from external forces beyond the control of Forno Appliances, including but not limited to wind, rain, sand, fires, floods, mudslides, freezing temperatures, excessive moisture or extended exposure to humidity, power surges,
- Lightning, structural failures surrounding the appliance and other acts of God.
- Products whose serial number has been altered/ damaged/tampered with. In no case shall Forno be held liable or responsible for damage to surrounding property, including furniture, cabinetry, flooring, panels, and other structures surrounding the Product. Forno is neither liable nor responsible for the Product if it is located in a remote area or an area where certified trained technicians are not reasonably available. Purchaser must bear any transportation and delivery costs of the Product to the nearest Authorized Service Center or the additional travel expenses of a certified trained technician

Warranty (continued)

THERE ARE NO EXPRESS WARRANTIES OTHER THAN THOSE LISTED AND DESCRIBED ABOVE, AND NO WARRANTIES, EITHER EXPRESS OR IMPLIED, INCLUDING, BUT NOT LIMITED TO, ANY IMPLIED WARRANTIES OF MERCHANTABILITY OR FITNESS FOR A PARTICULAR PURPOSE THAT SHALL APPLY AFTER THE EXPRESS WARRANTY PERIODS STATED ABOVE, AND NO OTHER EXPRESS WARRANTY OR GUARANTEE GIVEN BY ANY PERSON, FIRM OR CORPORATION WITH RESPECT TO THIS PRODUCT SHALL BE BINDING ON FORNO. FORNO SHALL NOT BE LIABLE FOR LOSS OF REVENUE OR PROFITS, FAILURE TO REALIZE SAVINGS OR OTHER BENEFITS, TIME AWAY FROM WORK, MEALS, LOSS OF FOOD OR BEVERAGES, TRAVELING OR HOTEL EXPENSES, EXPENSES TO RENT OR PURCHASE APPLIANCES, REMODELING/CONSTRUCTION EXPENSES IN EXCESS OF DIRECT DAMAGES WHICH ARE UNDENIABLY CAUSED EXCLUSIVELY BY FORNO OR ANY OTHER SPECIAL, INCIDENTAL OR CONSEQUENTIAL DAMAGES CAUSED BY THE USE, MISUSE OR INABILITY TO USE THIS PRODUCT, REGARDLESS OF THE LEGAL THEORY ON WHICH THE CLAIM IS BASED, AND EVEN IF FORNO HAS BEEN ADVISED OF THE POSSIBILITY OF SUCH DAMAGES. NOR SHALL RECOVERY OF ANY KIND AGAINST FORNO BE GREATER IN AMOUNT THAN THE PURCHASE PRICE OF THE PRODUCT SOLD BY FORNO AND CAUSING THE ALLEGED DAMAGE. WITHOUT PREJUDICE TO THE FOREGOING, PURCHASER ASSUMES ALL RISK AND LIABILITY FOR LOSS, DAMAGE OR INJURY TO PURCHASER AND PURCHASER'S PROPERTY AND TO OTHERS AND THEIR PROPERTY ARISING FROM THE USE, MISUSE, OR INABILITY TO USE THIS PRODUCT SOLD BY FORNO THAT IS NOT A DIRECT RESULT OF NEGLIGENCE ON THE PART OF FORNO THIS LIMITED WARRANTY SHALL NOT EXTEND TO ANYONE OTHER THAN THE ORIGINAL PURCHASER OF THIS PRODUCT, IS NON-TRANSFERABLE, AND STATES YOUR EXCLUSIVE REMEDY.



Correct Disposal of this product:
This marking indicates that this appliance should not be disposed with other household wastes. To prevent possible harm to the environment or human health from uncontrolled waste disposal, recycle it responsibly to promote the sustainable reuse of material resources.