Food-Waste Disposer

PRODUCT MODEL NUMBER

GC1000PE
GC1000XE
GC2000PE
GC2000XE
GC3000XE
GC5000XE

Electrical: A 120-volt, 60-Hz, AC-only 15- or 20-amp fused, grounded electrical supply is required. It is recommended that a separate circuit serving only your food-waste disposer be provided. Time-delay fuse of circuit breaker is recommended.

For continuous feed models, install a 15- or 20-amp wall switch above the countertop and junction box inside cabinet as shown. (Switch and electrical wiriing can be obtained locally.) Position switch in a convienient location. Connect switch to junction box.

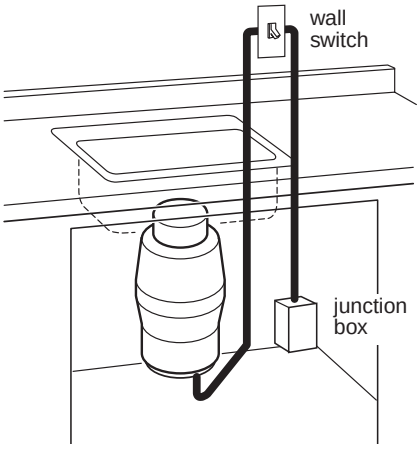

OVERALL DIMENSIONS

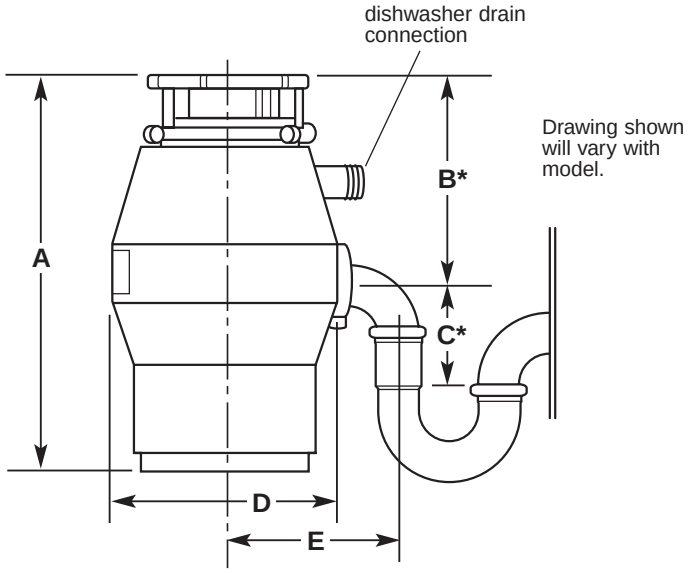

Model No.	A	B*	C*	D	E
GC1000PE	11-3/8"	5-15/16"	4"	6-5/16"	5"
GC1000XE	11-3/8"	5-15/16"	4"	6-5/16"	5"
GC2000PE	11-3/8"	5-15/16"	4"	6-5/16"	5"
GC2000XE	11-3/8"	5-15/16"	4"	6-5/16"	5"
GC3000XE	12-5/8"	5-15/16"	4"	6-5/16"	5"
GC5000XE	12-7/8"	6-11/16"	4"	7-3/4"	5-3/4"

B* – Distance from bottom of sink to center line of disposer outlet. Add 1/2 inch when stainless steel sink is used.

C* – Length of waste line pipe from center line of disposer outlet to end of waste line pipe.

IMPORTANT: Plumb waste line to prevent standing water in disposer motor housing.

Because Whirlpool Corporation policy includes a continuous commitment to improve our products, we reserve the right to change materials and specifications without notice.

Dimensions are for planning purposes only. For complete details, see Installation Instructions packed with product. Specifications subject to change without notice.

Ref. 4211597
01-08-04