


# MAYTAG® COMMERCIAL MULTI-LOAD STACK DRYER

# MLG31PC

MAYTAG® COMMERCIAL

**THE BEST WARRANTY IN THE BUSINESS — 5 YEARS ON ALL PARTS.**

## FAST, EFFICIENT DRYING IN LESS FLOOR SPACE

The MLG31PC offers a 42¾" footprint depth — one of the smallest in the industry. You can fit two 30-pound dryer pockets in the same floor space as one conventional multi-load dryer.

## MICROPROCESSOR CONTROLS

Maytag® Computer Trac® controls let you adjust prices by cycle, day and time and provide simple one-touch cycle selection.



## FOR YOUR CUSTOMERS:

- Fast-Drying Axial Airflow System
- Extra-Large Door Openings
- Digital Display Shows Time Remaining In Cycle

## FOR YOUR OPERATION:

- Single Coin Box For Both Dryers
- Front Access For Easy Service
- 2 6" Vents Convert To 1 10" Vent
- 2 Large-Capacity Lint Drawers

## BUILT-TO-LAST™ FEATURES:

- Built Like A Tank — One Of The Heaviest 30-Pound Stack Dryers On The Market
- Heavy-Duty Enclosed Motors
- Permanently Lubricated Bearings
- The Best Warranty In The Business



*Model MLG31PC shown in White.*

**SMALLER FOOTPRINT REQUIRES LESS FLOOR SPACE.**

*Model MLG31PC shown in Stainless Steel.*

LAUNDRY SOLUTIONS YOU CAN DEPEND ON.

CLP662

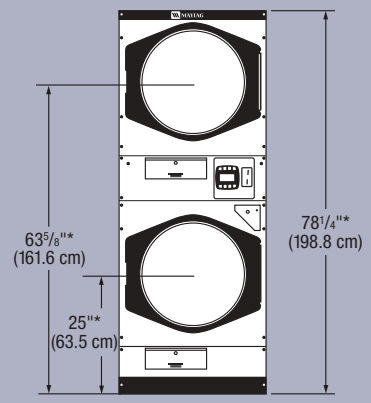


FRONT VIEW

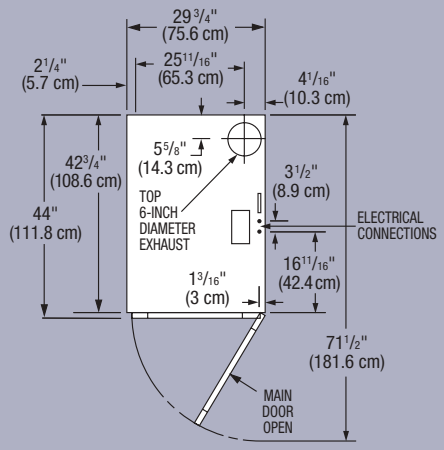


TOP VIEW

*Dimensions will vary according to adjustment of leveling legs; add ½" (1.3 cm) minimum.

# Maytag® Commercial Multi-Load Stack Dryer —
## MICROPROCESSOR COIN-DROP

| | Maytag® Commercial Multi-Load Stack Dryer |
|---|---|
| **DRYER SPECIFICATIONS** | |
| **MODEL** | **MLG31PC** |
| **MOTOR** | |
| Single-phase, thermoprotected against overload, auto-reset | • |
| HP (kw) | ⅓ (.249) |
| **CAPACITY** | |
| Lbs. (kg) | 30 (13.6) |
| Cu. ft. (cu. m) | 10.1 (.287) |
| **AIRFLOW** | |
| Cfm (cmm) per drying chamber | 400 (11.3) |
| **TUMBLER** | |
| Diameter — in. (cm) | 27¼ (69.2) |
| Depth — in. (cm) | 30 (76.2) |
| **DOOR OPENING DIAMETER** | |
| In. (cm) | 21½ (54.6) |
| **ELECTRICAL REQUIREMENTS** | 110V, 60 Hz |
| **BREAKER/FUSE REQUIREMENTS** | |
| Amps per drying chamber | 20 |
| **EXHAUST DUCT DIAMETER** | |
| 1 inlet — in. (cm) | 10 (25.4) |
| 2 inlets — in. (cm) | 6 (15.2) |
| **GAS RATING** | |
| BTU/hr. (kcal/hr.) per drying chamber | 68,000 (17,135) |
| **GAS INLET** | |
| In. (cm) | ½ (1.3) |
| **ADJUSTABLE LEVELING LEGS** | • |
| **COLORS** | |
| White | • |
| Bisque | • |
| Stainless Steel | • |
| **APPROXIMATE WEIGHT** | |
| Crated — lbs. (kg) | 860 (390.1) |
| Uncrated — lbs. (kg) | 793 (359.7) |

See specific instructions for proper installation. Because of continuous product improvement, Maytag reserves the right to change specifications without notice.

NEW YORK CITY M.E.A.

MAYTAG LIMITED 5 YEAR WARRANTY ALL PARTS

## 5 YEARS — ALL PARTS

For a period from the date of original purchase through the time listed above, the designated parts that fail in normal commercial use will be repaired or replaced free of charge for the part itself, with the owner paying all other costs, including labor, transportation and customs duty. Chemical damage is excluded from all warranty coverage. See complete warranty for details.

MAYTAG® COMMERCIAL