ZEPHYR HORIZON DHZ-M90AMBX, DHZ-M90AMWX

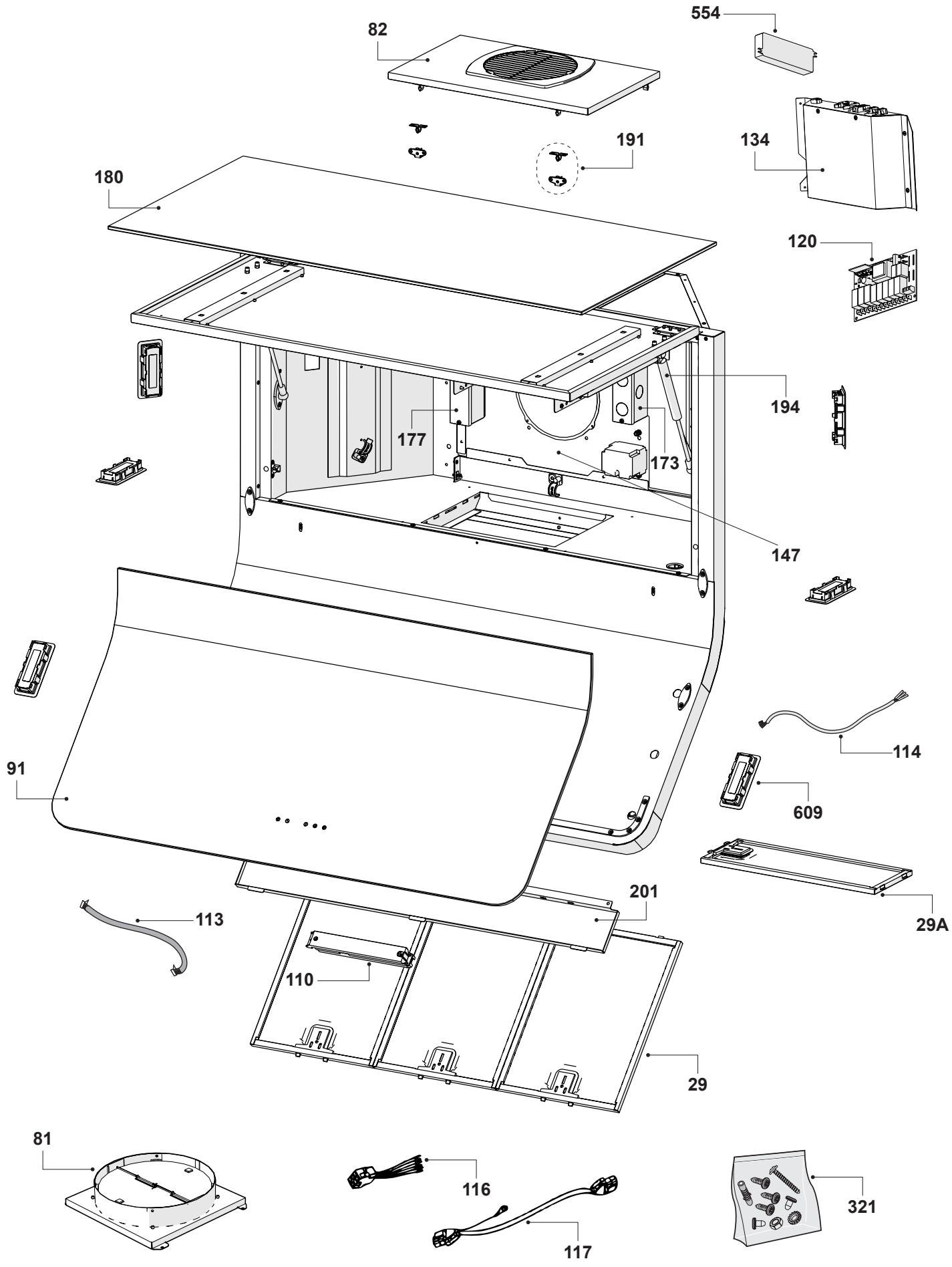

ZEPHYR

Horizon

DHZ-M90AMBX, DHZ-M90AMWX

Ref #	Part #	Description	Qty.
29	50210043	Hybrid Baffle Filter	3
29A	50210044	Hybrid Baffle Filter	1
81	54050087	Remote Blower Collar w/Damper	1
82	56210097	Top Cover	1
91	50300140	Front Glass Canopy, DHZ-M90AMWX	1
91	50300141	Front Glass Canopy, DHZ-M90AMBX	1
110	11000159	Switch Assembly	1
113	11030159	Switch Cable	1
114	11030160	LED Lights Wiring	1
116	11030157	Remote Blower Wiring Harness	1
117	11030158	Remote Blower Wiring Extension	1
120	11010135	Main Power Control Board	1
134	56210098	Electronics Housing	1
147	54140308	Blower Support Bracket	1
173	54200022	Main Power Junction Box	1
177	54200023	Remote Blower Wiring Junction Box	1
180	50300142	Lower Glass Canopy, DHZ-M90AMWX	1
180	50300143	Lower Glass Canopy, DHZ-M90AMBX	1
191	54050088	Top Cover Coupler	2
194	54150021	Front Canopy Spring	2
201	50110334	Light Panel	1
321	05000158	Hardware Packet	1
554	12110023	Transformer	1
609	Z0B0051	LED Light, 5W	6