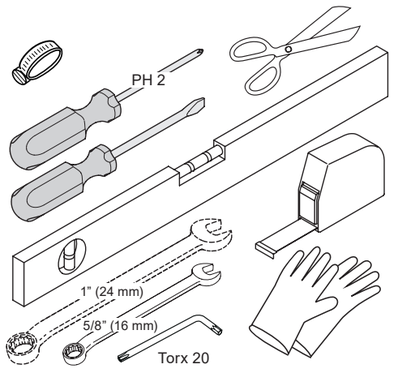


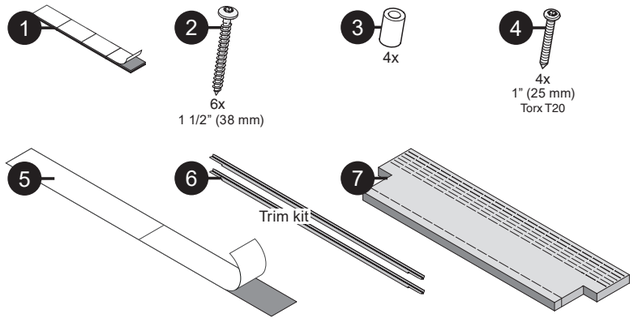


## 1

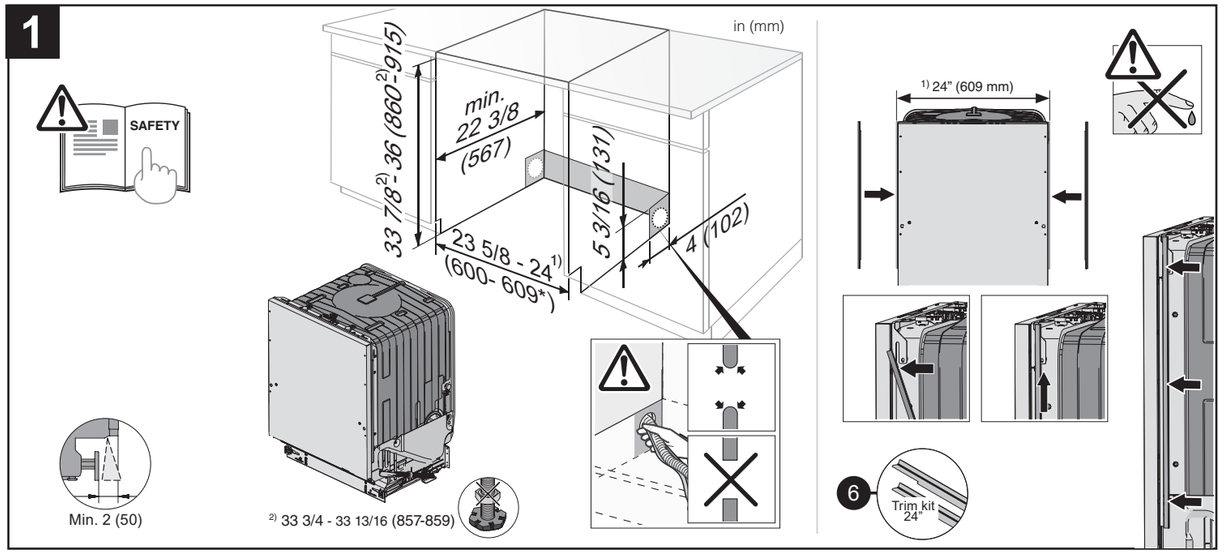


## 2




## 3

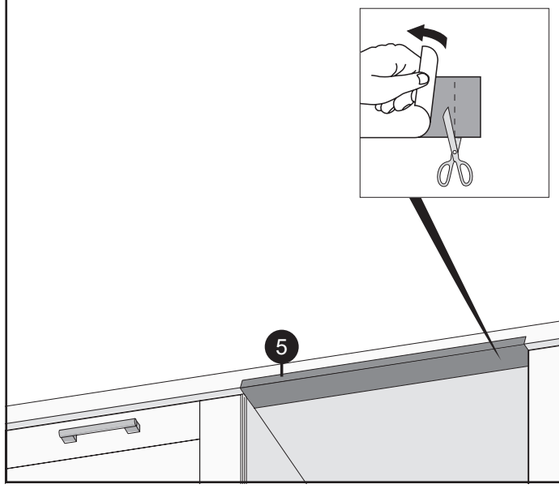


## 4

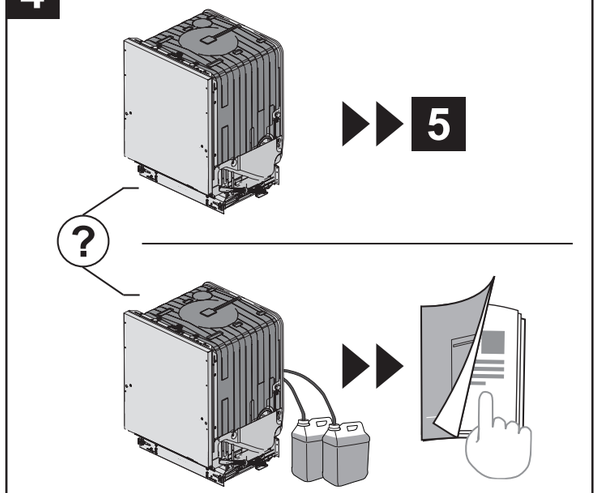


## 5

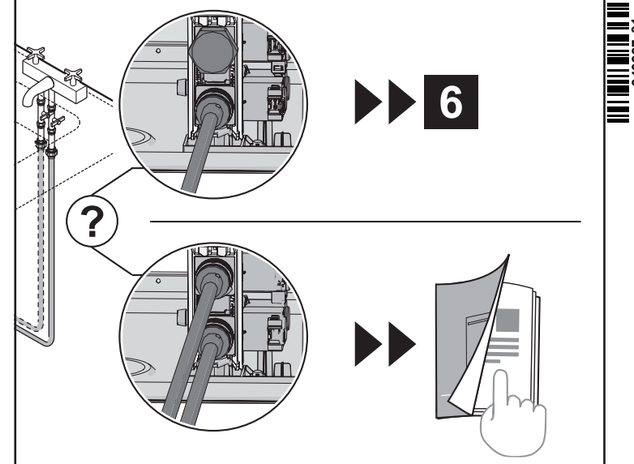


## 6

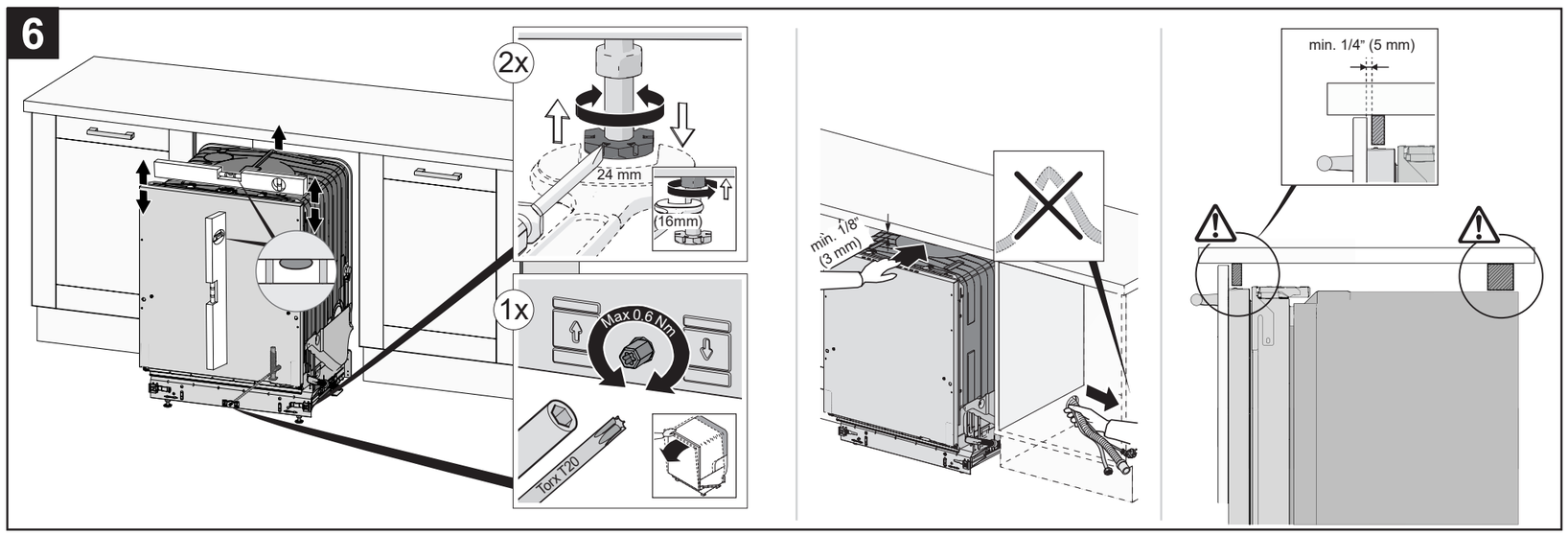


## 7

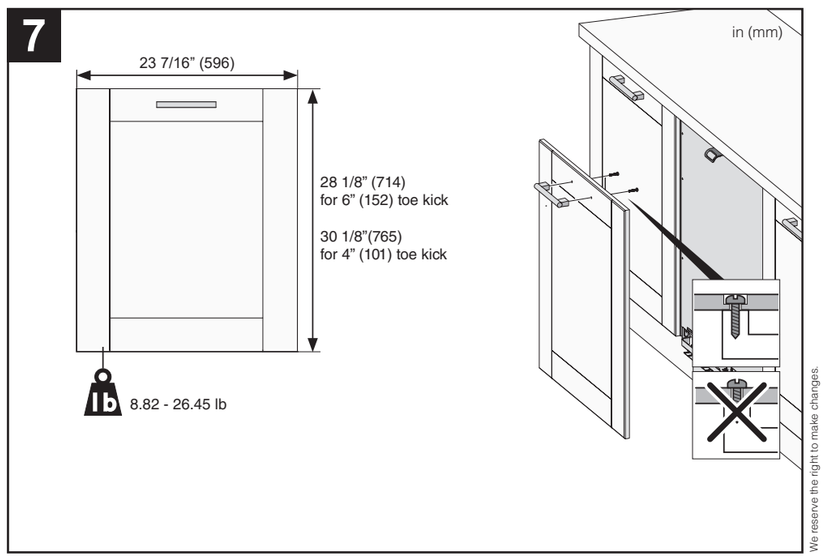


We reserve the right to make changes.

01-469696

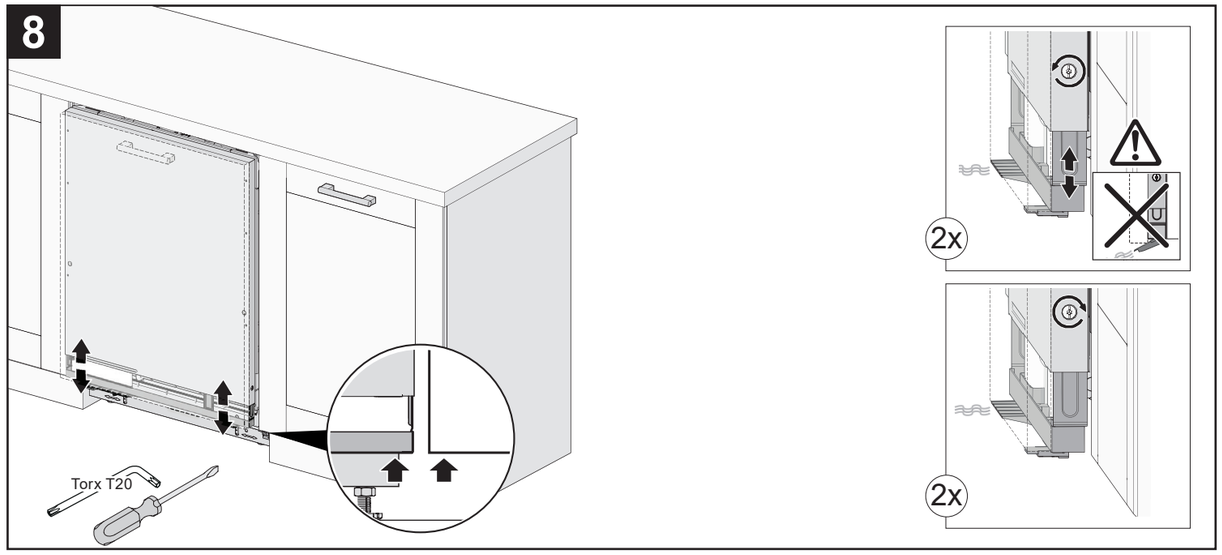
8
Torx T20
2x
2x

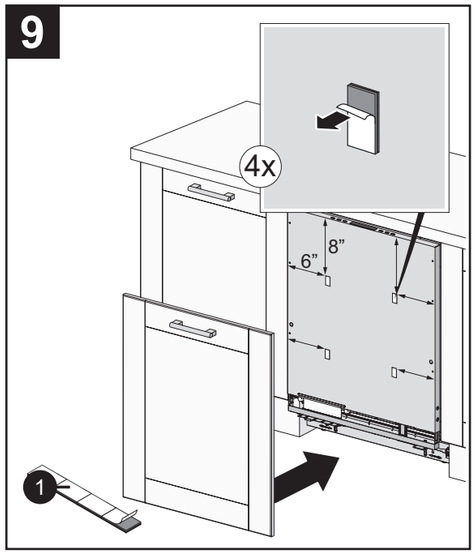
9
4x
8”
6”
1

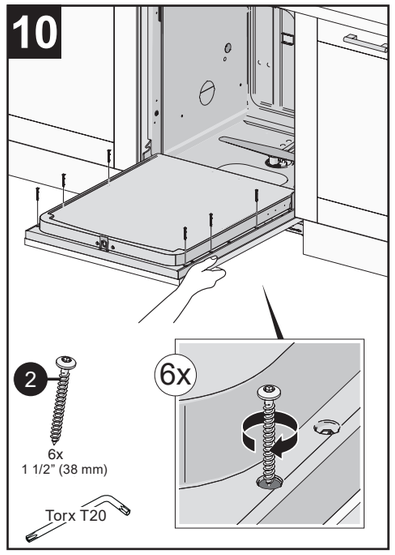
10
2
6x
1 1/2” (38 mm)
6x
Torx T20

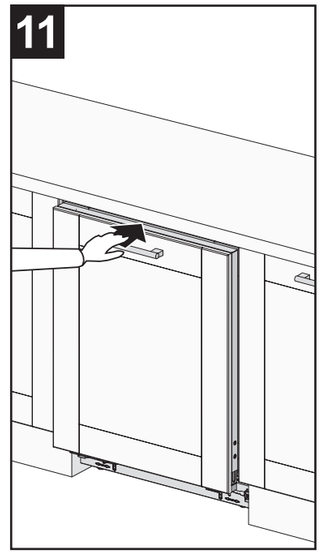
11

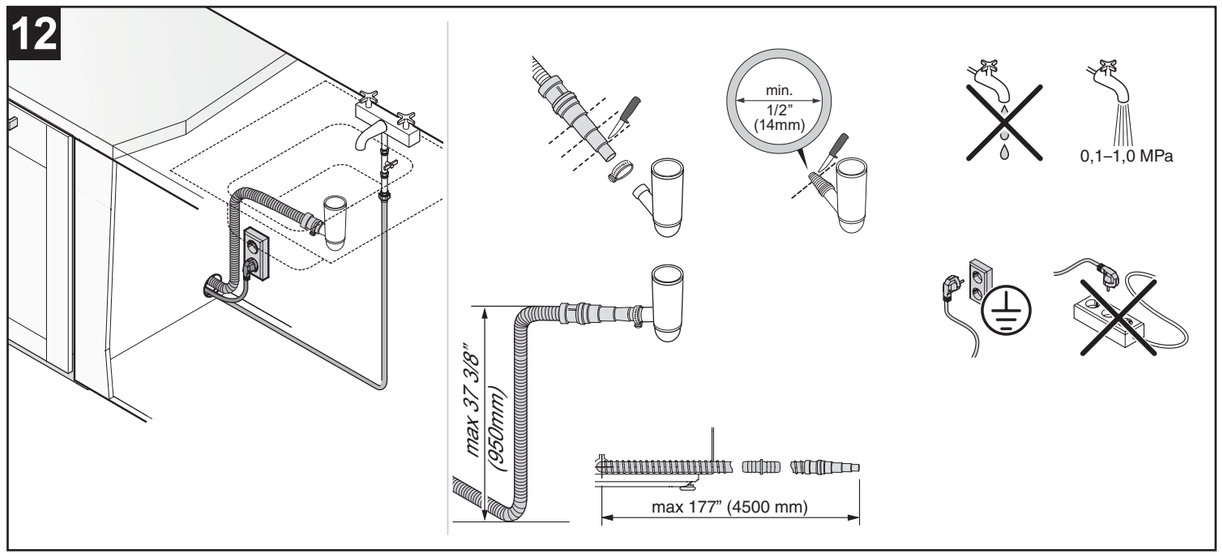
12
min.
1/2”
(14mm)
0,1–1,0 MPa
max 37 3/8”
(950mm)
max 177” (4500 mm)

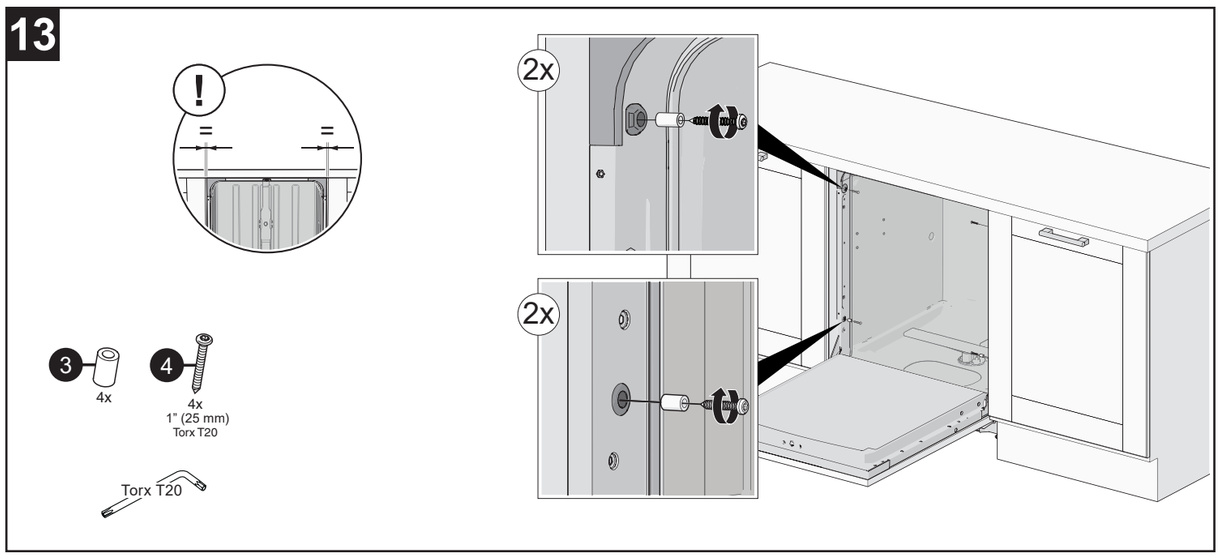
13
!
=
=
2x
2x
3
4x
4
4x
1” (25 mm)
Torx T20
Torx T20

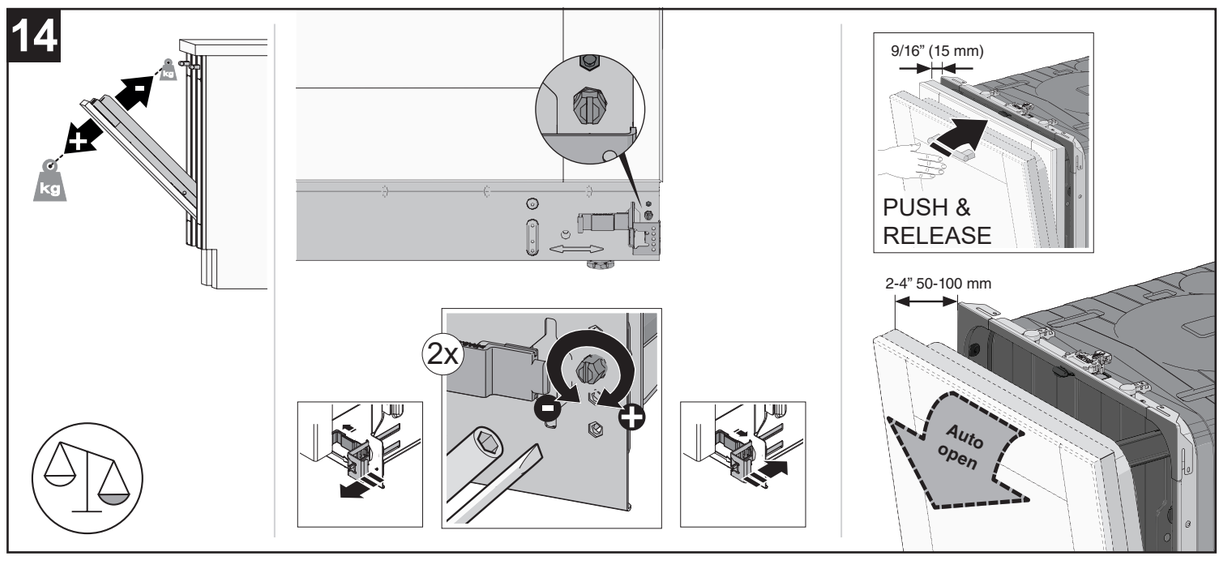
14
kg
2x
9/16” (15 mm)
PUSH &
RELEASE
2-4” 50-100 mm
Auto
open

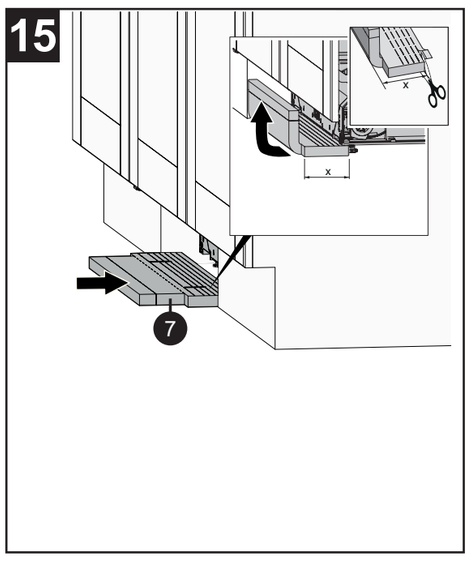
15
x
x
7

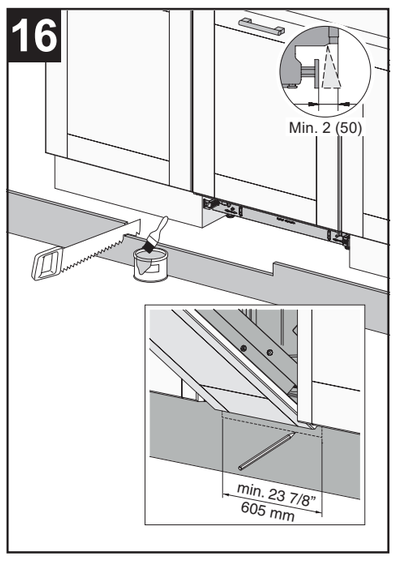
16
Min. 2 (50)
min. 23 7/8”
605 mm

