

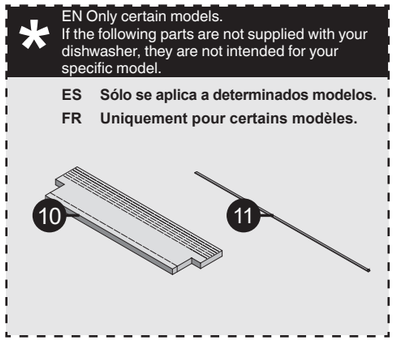

***** EN Only certain models.
If the following parts are not supplied with your dishwasher, they are not intended for your specific model.

ES **Sólo se aplica a determinados modelos.**

FR **Uniquement pour certains modèles.**

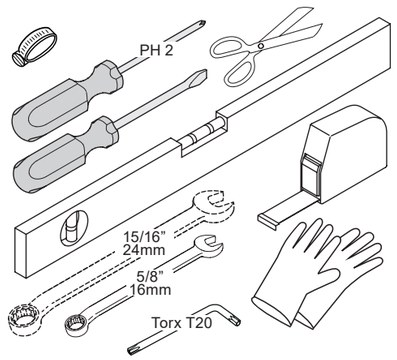

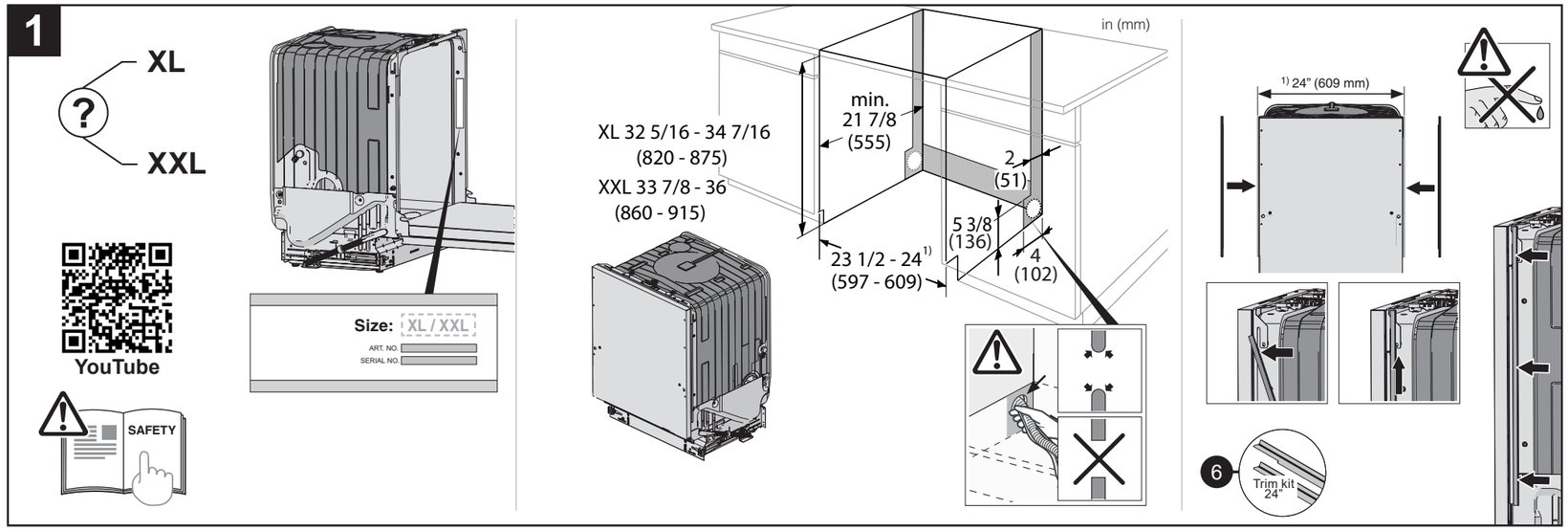



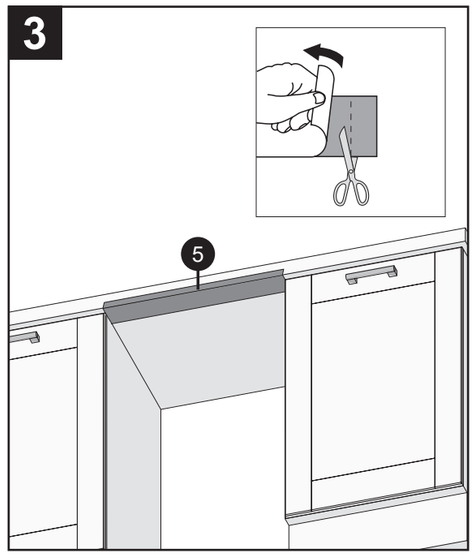

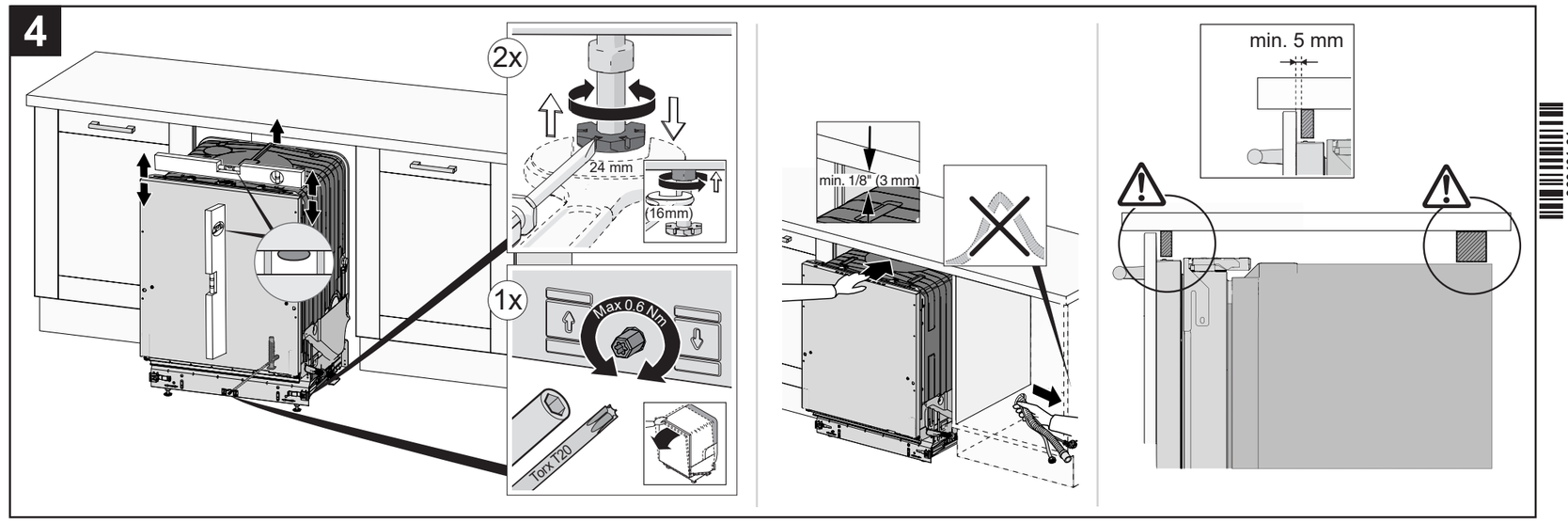

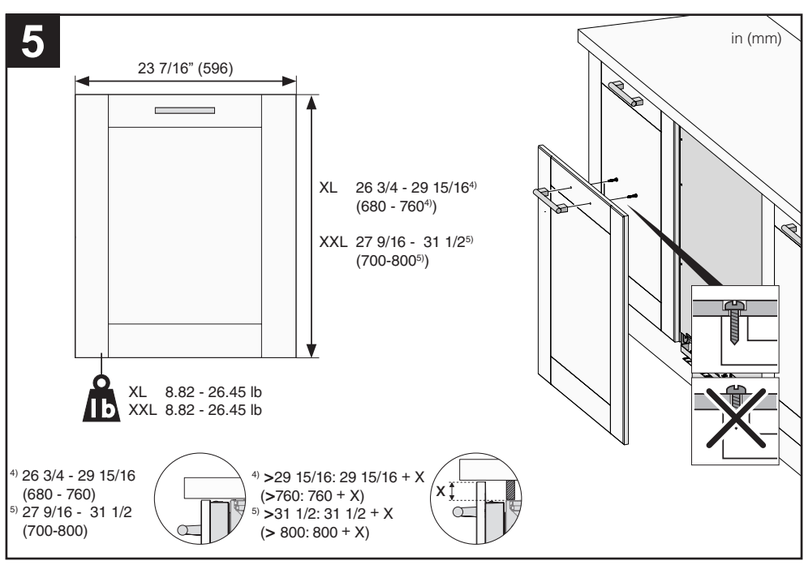

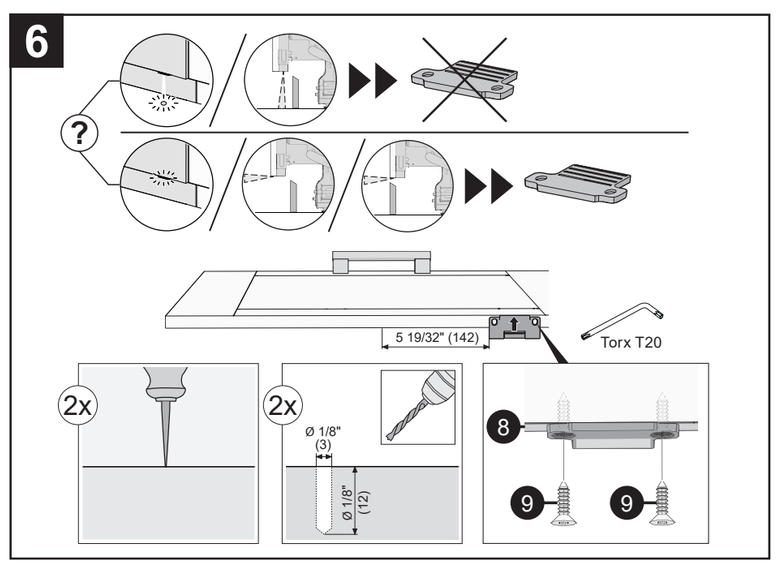

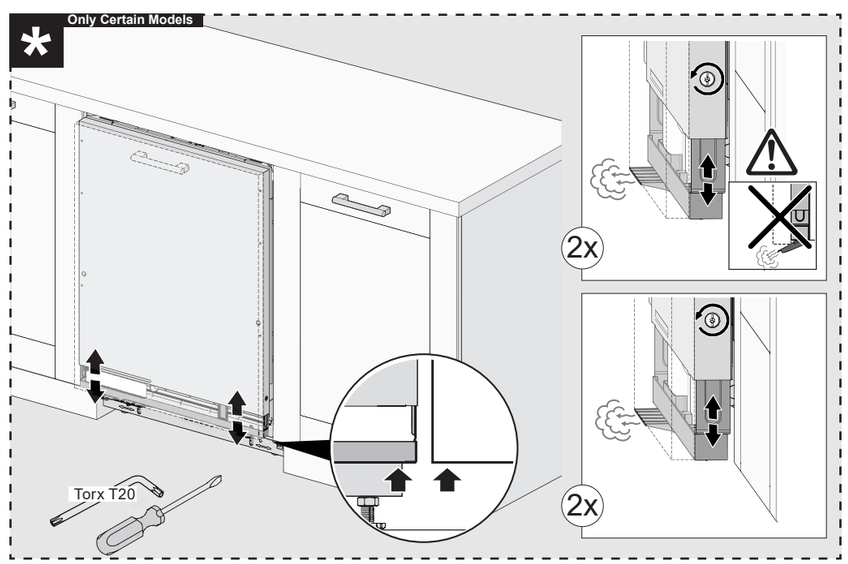

960401-01

We reserve the right to make changes.

7

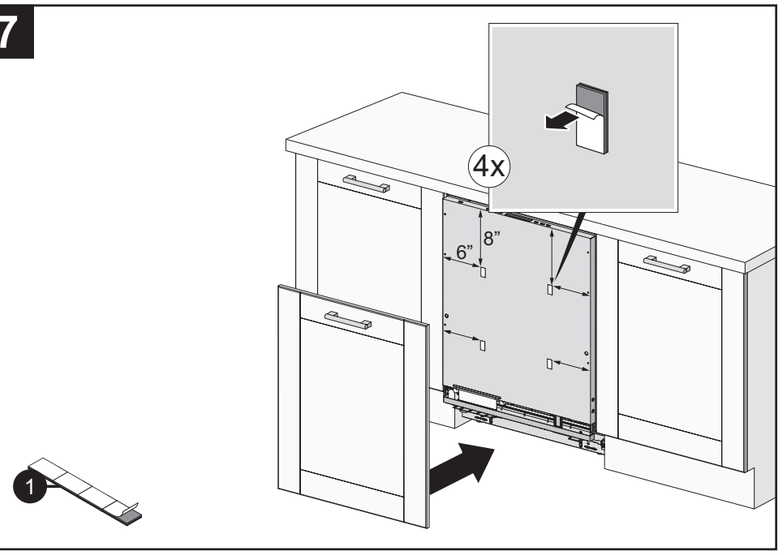

8

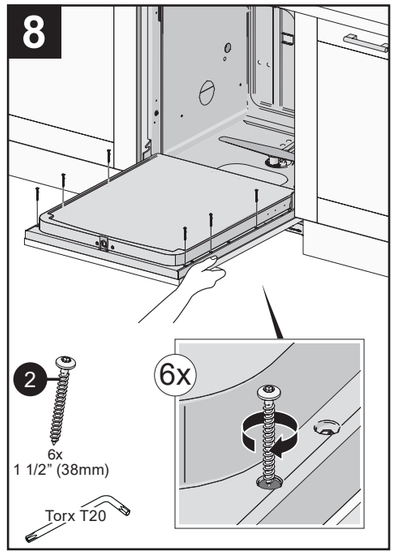

9

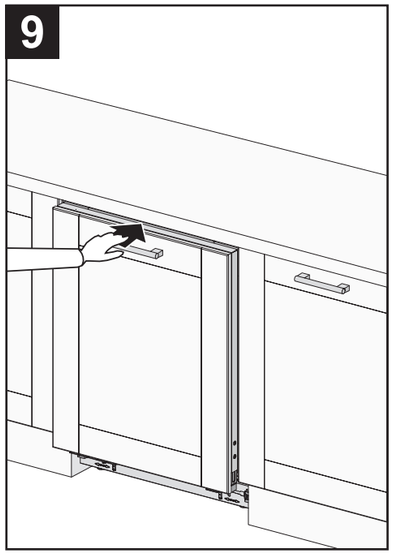

10

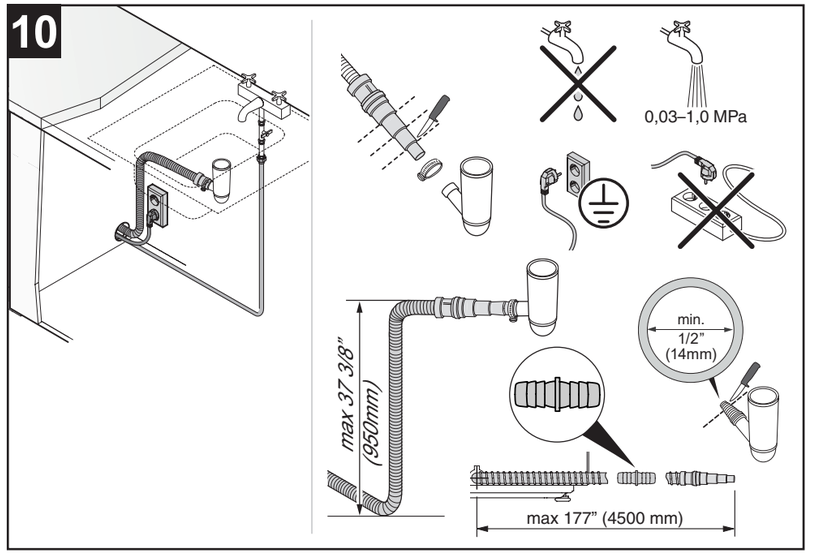

11

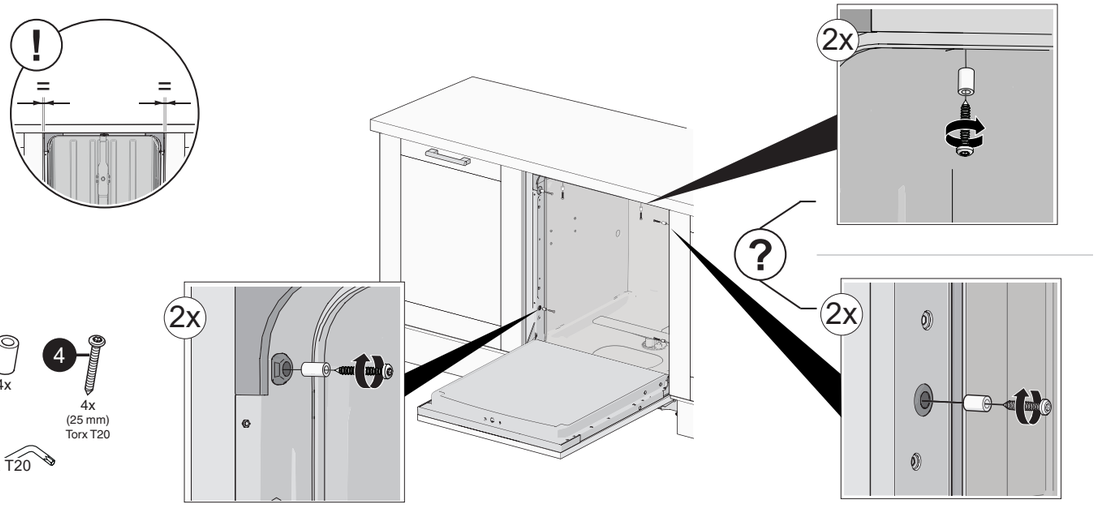

12

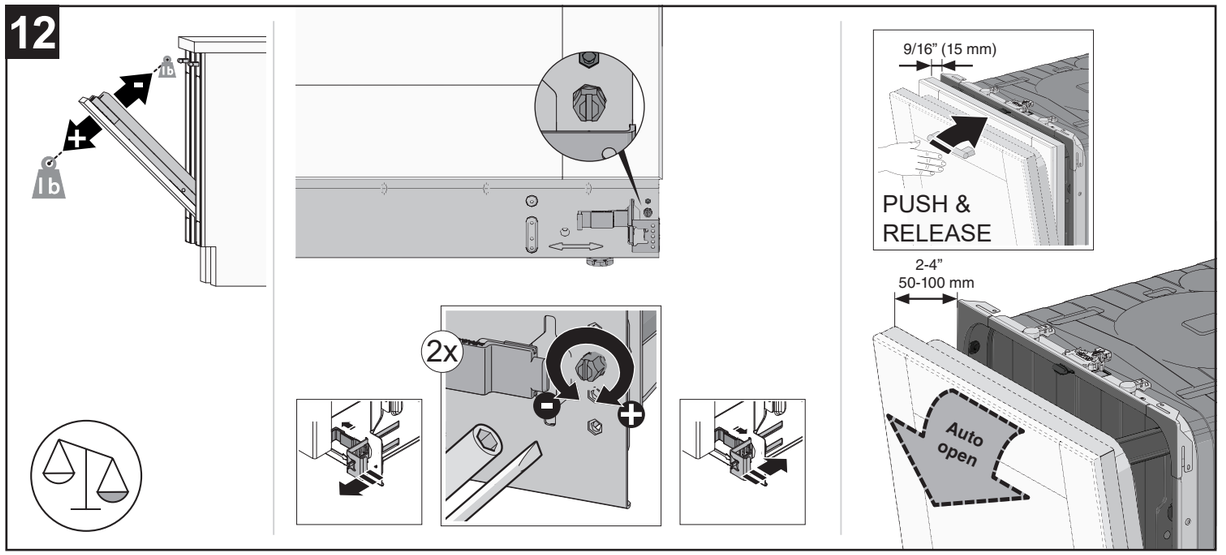

Only Certain Models *

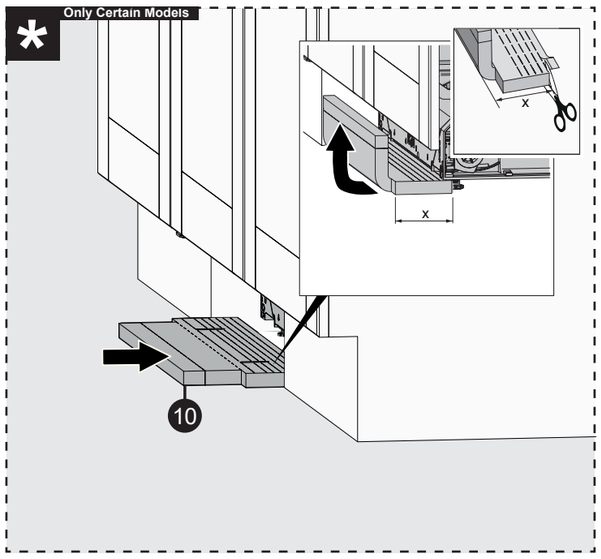

Only Certain Models *

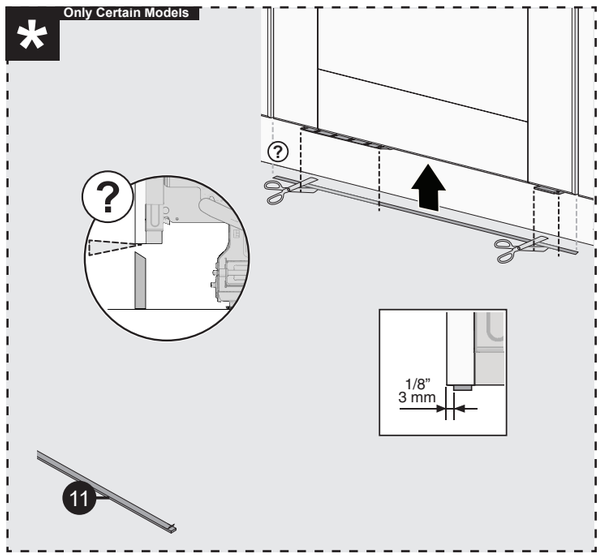

13

