USER GUIDE

AGA ELISE
36” & 48” INDUCTION RANGETOP

08-000028-01

Contents

1. Important safety information 1

Important Safety Notice & Warning 1
In Case of Fire 1
To Prevent Fire or Smoke Damage 1
Wear Suitable Clothing 2
Use Only Dry Potholders or Oven Gloves 2
Pan Performance Check 3
Use the Right Size Pan 3
General safety instructions 4

2. Rangetop overview 5

The Rangetop 5
Overheat function 6
Rangetop control indications & warnings 6
Pan detector, 6
Residual heat indicator 6
Automatic heat-up 7
Child lock 7
Low temperature/simmer setting 8
Power boost setting 8
The Bridging-Zone Function (36" only) 9

3. Cleaning your Rangetop 10

4. Troubleshooting 11

5. Installation Instructions 12

6. Service and parts 13

7. Installation safety instructions 14

8. Installation 15

Positioning the Rangetop 15
Fitting the side panels for 48" 18
Install and secure the Rangetop 19

9. Electrical connection 20

10. Circuit diagram 22

11. Technical data 23

1. Important safety information

Have your appliance properly installed and grounded by a qualified installer. The installation must conform with local codes or, in the absence of local codes, in accordance with the National Electrical Code ANSI/NFPA 70 or the Canadian Electric Code, CSA C22.1.

READ THESE INSTRUCTIONS FULLY BEFORE USE SAVE THESE INSTRUCTIONS FOR FUTURE REFERENCE.

ALL PICTURES SHOWN ARE FOR ILLUSTRATION PURPOSES ONLY. ACTUAL PRODUCTS AND COMPONENTS MAY VARY DUE TO PRODUCT ENHANCEMENT.

Install only as described in the installation section of this book.

Ask your dealer to recommend a qualified installer and an authorized repair service. Know how to disconnect the power to the Rangetop at the circuit breaker or fuse box in case of an emergency.

Important Safety Notice & Warning

- **IMPORTANT INFORMATION -** If you are wearing a medical device (such as a pacemaker), consult your doctor. The operation of the appliance may affect a medical device.
- Prior to connecting, the cable should be inspected for any damage. In the event of damage please consult your electrical installer.
- You must provide adequate clearance between the Rangetop and adjacent combustible surfaces. Refer to Installation Instructions.
- Save the installation instructions for the local electrical inspector's use.

In Case of Fire

⚠ **DO NOT use water on grease fires. NEVER pick up a flaming pan. Turn the controls off. Smother a flaming pan on a cooktop zone by covering the pan completely with a well-fitting lid or baking tray. Isolate the power source, where it is safe to do so, either at the control or isolator. If available, use a multipurpose dry chemical or foam-type fire extinguisher.**

Open doors and windows or if a hood is installed turn it on to remove smoke and odor.

To Prevent Fire or Smoke Damage

Before using the Rangetop make sure all the packing materials have been removed.

Always keep the area around the Rangetop free from combustible materials, gasoline, and other flammable vapors and liquids.

⚠ **NEVER leave any items on the cooktop. The hot air from a rear vent may ignite flammable items and may increase pressure in closed containers, which may cause them to burst. Many aerosol-type spray cans are EXPLOSIVE when exposed to heat and may be highly flammable. Avoid their use or storage near an appliance.**

Many plastics will burn, and most are damaged by heat. **DO NOT** leave plastic items on the cooktop as they may burn, melt or soften if left too close to a vent or an energized surface element.

Storage should not be installed directly above a Rangetop. To eliminate the risk of burns or fire by reaching over heated surface units, cabinet storage space located above the surface units should be avoided. If cabinet storage is to be provided, the risk can be reduced by installing a range hood that projects horizontally a minimum of 5 inches beyond the bottom of the cabinets.

Destroy the carton and plastic bags after unpacking the Rangetop. **NEVER** allow children to play with packaging material.

⚠ **NEVER use this appliance as a space heater to heat or warm the room.**

⚠ **It is recommended that this appliance is serviced annually by a qualified service engineer.**

⚠ **DO NOT repair or replace any part of the appliance unless specifically recommended in this Owner's Guide. Always consult a qualified service engineer.**

All other servicing should be done only by an authorized servicing technician, this may reduce the risk of personal injury and damage to the Rangetop.

NEVER modify or alter the construction of a Rangetop by removing panels, wire covers, screws, or any other part of the product.

⚠ **DO NOT leave children alone.**

Babies, toddlers and young children should not be allowed near the Rangetop at any time. They should **NEVER** be allowed to sit or stand on any part of the appliance.

DO NOT allow children to climb or play around the Rangetop. Teach them not to play with controls or any other part of the Rangetop.

CAUTION: NEVER store items of interest to children in the cabinets above a Rangetop or on the backguard of a

Rangetop; children climbing on the Rangetop to reach them could be seriously injured.

This instruction is based on safety considerations.

Flammable materials should not be stored near the cooktop zones. This includes paper, plastic and cloth items, such as cookbooks, plasticware and towels, as well as flammable liquids. **DO NOT** store explosives, such as aerosol cans, on or near the appliance.

Flammable materials may explode and result in fire or property damage.

⚠ **To avoid risk of electrical shock, personal injury, or death, make sure your Rangetop has been properly grounded and always disconnect it from main power supply before servicing.**

DO NOT touch the cooktop areas.

The marked areas on the cooktop may be hot even if they have been off for some time. Areas near the cooking area may become hot enough to cause burns. During and after use, **DO NOT** touch, or let clothing touch or other flammable materials contact the cooktop or areas near the cooking area until they have had enough time to cool. These areas include the Rangetop and rear vent.

Wear Suitable Clothing

NEVER wear loose-fitting or hanging clothes while using the cooktop. Be careful when reaching for items stored in cabinets over the cooktop. Flammable material could be ignited if brought into contact with a hot surface and may cause severe burns.

Use Only Dry Potholders or Oven Gloves

Moist or damp potholders on hot surfaces may result in burns from steam. **NEVER** let a potholder touch hot heating elements.

DO NOT use a towel or other bulky cloth in place of a glove. They might catch fire if they touch a hot surface.

Use dry oven gloves when applicable – using damp gloves might result in steam burns when you touch a hot surface. **NEVER** operate the Rangetop with wet hands.

DO NOT place metallic objects such as knives, forks, spoons and lids on the cooktop surface since they can get hot.

Induction care

Important information for pacemaker and implanted insulin pump users: The functions of this Rangetop comply with the applicable standards on electromagnetic interference. If you are fitted with a pacemaker or implanted insulin pump and are concerned, please consult your doctor for medical advice.

To fully utilize the power of your induction Rangetop and to ensure longevity of performance, we recommend the use of AGA approved Induction Pots and Pans. If you decide to purchase an alternative set of pans for use on your induction Rangetop, we would strongly recommend that composite aluminum pans with steel inserts, example shown. **Fig. 1.1**, are avoided. This type of pan construction can significantly reduce the lifetime and performance of your induction Rangetop.

NEVER cook directly on the cooktop surface (Fig. 1.2).

⚠ **DO NOT cook on a broken cooktop. If the cooktop should break, cleaning solutions and spillovers may penetrate the broken cooktop and cause a risk of electric shock. Contact a qualified installer immediately (Fig. 1.3).**

⚠ **Should a crack appear in the surface, disconnect the Rangetop immediately from the supply and arrange for its repair.**

⚠ **NEVER leave surface units unattended at high heat settings - boilover may cause residue that may ignite.**

⚠ **ALWAYS LIFT pans off the cooktop. Sliding pans may cause marks and scratches (Fig. 1.4).**

⚠ **Take care NOT TO PLACE HOT LIDS onto the cooktop surface (Fig. 1.5). Lids that have been used to cover a hot pan can "stick" or create a "vacuum" effect to the glass top. Should this occur, DO NOT attempt to lift the lid off the glass surface, this may damage the glass. Instead slide the lid to the edge of the cooktop and remove, taking care not to scratch the cooktop surface. Alternatively wait until the lid has cooled to room temperature, the vacuum has been released, then remove the lid by lifting it from the cooktop.**

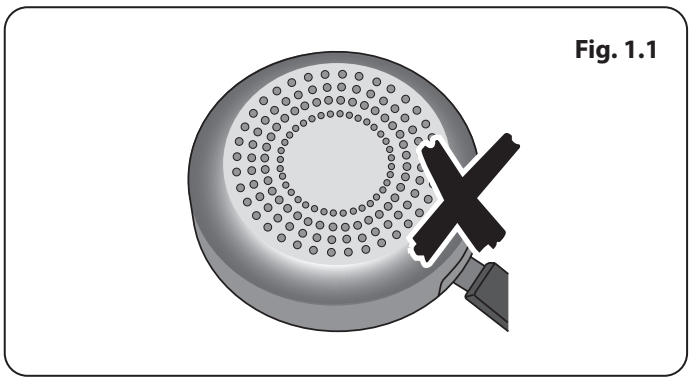
Fig. 1.1

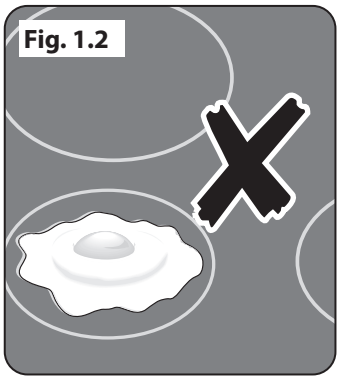
Fig. 1.2

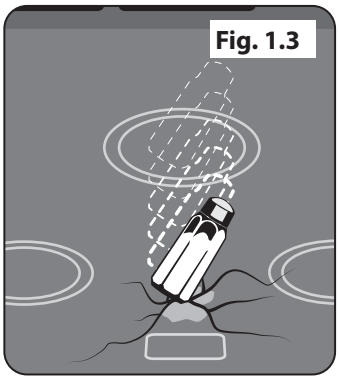
Fig. 1.3

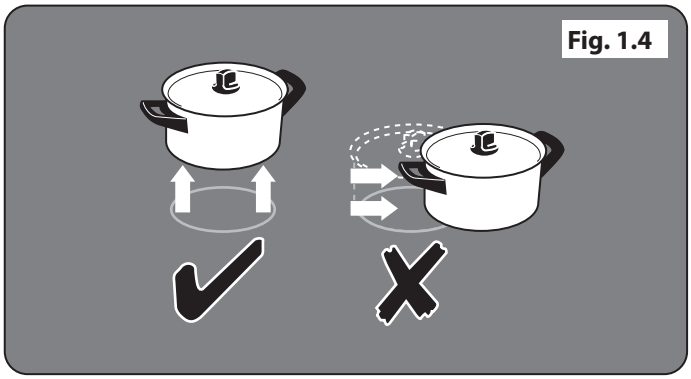
Fig. 1.4

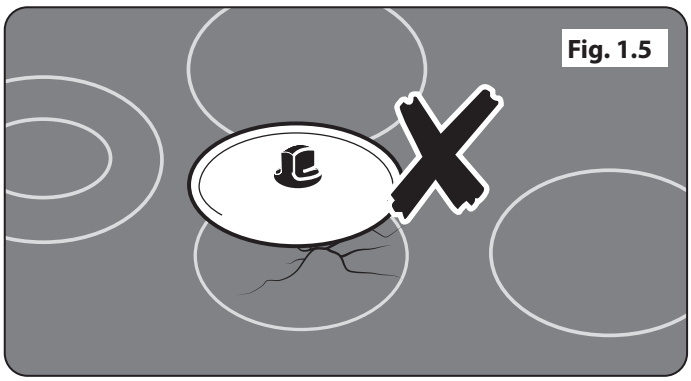
Fig. 1.5

Pan Performance Check

Method:

Use a 1.85 Kw zone (refer for ratings of each zone **Fig. 2.4**).

- Fill an unlidded pan with 1/2 liter of room temperature water (the diameter of pan should not be greater than the outer circle of the zone).
- Operate the zone at power level 9.
- The water should boil within 3 ½ minutes.

Boiling times outside this duration would suggest that the pan construction is not ideal to provide best performance and can result in premature component failure.

Use the Right Size Pan

This appliance is equipped with cooktop zones of different sizes. Use utensils with flat bottoms. **DO NOT** use unstable pans and position the handles away from the edge of the cooktop.

The proper relationship of pan location to zones will improve efficiency.

⚠ **NEVER leave cooktop zones unattended at high settings. Pans boiling over can cause smoking and greasy spills may catch on fire.**

⚠ **DO NOT use hotplate protectors, foil or hotplate covers of any description. These may affect the safe use of your hotplate zones and are potentially hazardous to health.**

⚠ **Only certain types of stainless steel, enameled steel pans or cast iron pans with enameled bases are suitable for induction cooktop cooking.**

⚠ **The handle of a utensil should be positioned so that it is turned inward to reduce the risk of burns, ignition of flammable materials, and spillage due to unintentional contact with the utensil.**

General safety instructions

This appliance must be installed by a qualified installer in accordance with the installation instructions. The installation must comply with the relevant regulations and also the local electricity supply company requirements.

This appliance is designed for domestic cooking only. Use for any other purpose could invalidate any warranty or liability claim.

The Rangetop should be serviced by an authorized service technician and only approved parts used. Have the installer show you the location of the Rangetop circuit breaker. Mark it for easy reference. Always allow the Rangetop to cool and then switch off at the circuit breaker before cleaning or carrying out any maintenance work, unless specified otherwise in this guide.

⚠ **All parts of the Rangetop become hot with use and will retain heat even after you have stopped cooking.**

⚠ **Take care when touching Rangetop, to minimize the possibility of burns, always be certain that the controls are in the OFF position and that it is cool before attempting to clean the Rangetop.**

⚠ **Clean with caution. If a wet sponge or cloth is used to wipe spills on a hot surface, be careful to avoid steam burns. Some cleaners can produce noxious fumes if applied to a hot surface.**

Clean only parts listed in this guide.

In the interests of hygiene and safety, the Rangetop should be kept clean at all times as a build up in fats and other food particles could result in a fire.

Always keep combustible wall coverings or curtains etc. a safe distance away from your Rangetop.

⚠ **DO NOT spray aerosols in the vicinity of the Rangetop while it is in use.**

DO NOT store or use combustible materials, or flammable liquids in the vicinity of this appliance.

Take great care when heating fats and oils, as they will ignite if they get too hot.

Use a deep fat thermometer whenever possible to prevent overheating fat beyond the smoking point.

⚠ **NEVER leave a deep fry pan unattended. Always heat fat slowly and watch as it heats. Deep fry pans should be only a maximum of one third full of fat. Filling the pan too full of fat can cause spill over when food is added. If you use a combination of oils or fats in frying, stir them together before heating, or as the fats melt.**

Foods for frying should be as dry as possible. Frost on frozen foods or moisture on fresh foods can cause hot fat to bubble up and over the sides of the pan. Carefully watch for spills or overheating of foods when frying at high or medium high temperatures. **NEVER** try to move a pan of hot fat, especially a deep fry pan. Wait until the fat is cool.

When using an electrical appliance near the cooktop, be sure that the cable of the appliance does not come into contact with the cooktop.

Take care that no water seeps into the appliance.

Make sure that your kitchen is well ventilated at all times. Use extractor fans or hoods when installed.

The Rangetop is designed for cooking foods only and must not be used for any other purpose.

The specification of this Rangetop should not be altered.

This appliance is heavy, take care when moving it.

When the Rangetop is not in use ensure that the control knobs are in the off position.

2. Rangetop overview

36″

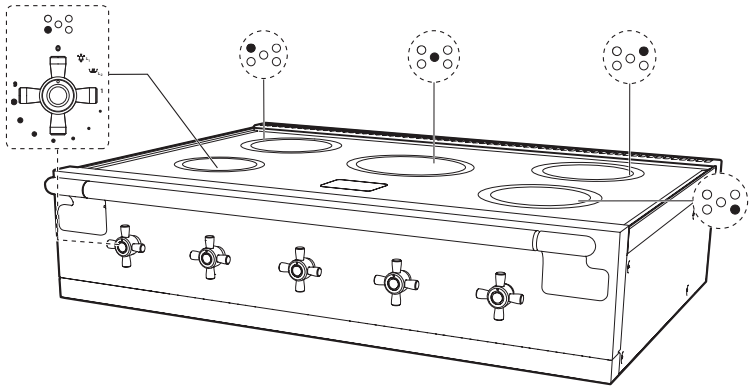

Fig. 2.1

48″

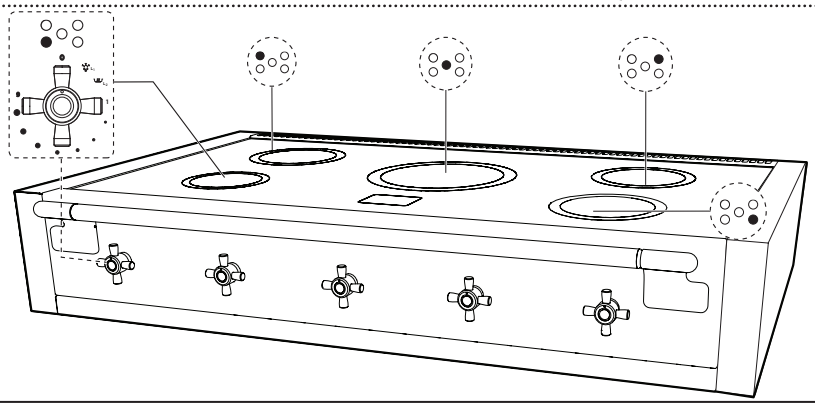

The Rangetop

Use only pans that are suitable for induction Rangetops. We recommend stainless steel, enamel steel pans or cast-iron pans with enamel bases. Note that some stainless-steel pans are not suitable for use with an induction Rangetop so please check carefully before purchasing any cookware.

The controls for the induction zones are shown in **Fig. 2.1**.

Pans made of copper, aluminum or ceramic are not suitable for use on an induction Rangetop. The kind of pan you use, and the quantity of food affects the setting required. Higher settings are required for larger quantities of food.

Pots and pans should have thick, smooth, flat bottoms (**Fig. 2.2**). This allows the maximum heat transfer from the Rangetop to the pan, making cooking quick and energy efficient. Never use a round-bottomed wok, even with a stand.

The very best pans have bases that are very slightly curved up when cold (**Fig. 2.3**). If you hold a ruler across the bottom you will see a small gap in the middle. When they heat up the metal expands and lies flat on the cooking surface.

Make sure that the base of the pan is clean and dry to prevent any residue burning onto the Rangetop panel. This also helps prevent scratches and deposits.

Use pans that are the similar size as (or slightly larger than) the areas marked on the cooktop. Using a lid will help the contents boil more quickly.

⚠ **Always take care before touching the surface, even when the Rangetop is turned off. It may be hotter than you think!**

Fig. 2.2

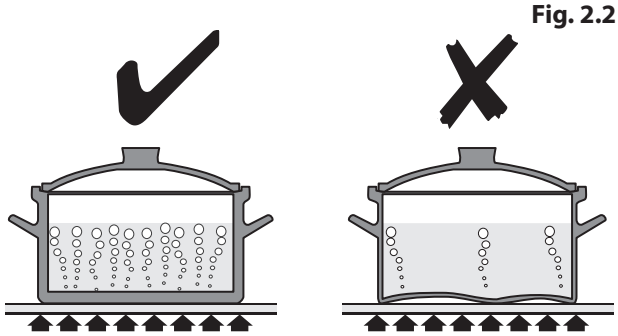

Fig. 2.3

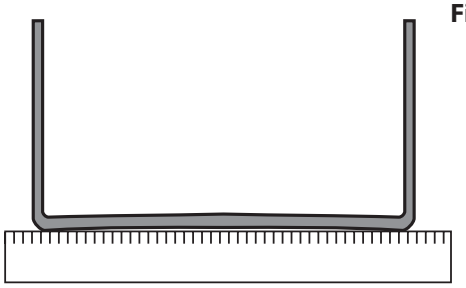

Fig. 2.4

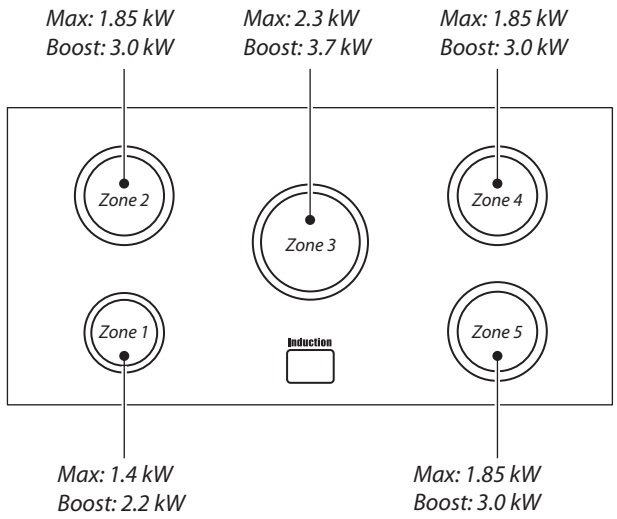

Fig. 2.5

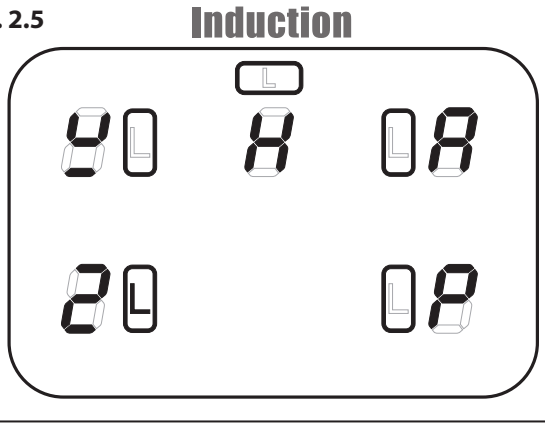

Cooking zone	Minimum Pan Diameter (Pan base) inches (mm)
Front left	4¾" (120)
Rear left	5½" (140)
Center	8¼" (160)
Rear right	5½" (140)
Front right	5½" (140)

Table 2.1

Overheat function

This function identifies when the temperature of the pan rises rapidly and works to maintain a safe level of pan temperature. It should not interfere with normal cooking.

Cookware with bases that become distorted (**Fig. 2.2**) when heated may interfere with the operation of the Overheat Function. This may result in damage to your cookware or Induction Glass Rangetop.

Rangetop control indications & warnings

The induction Rangetop comprises of five cooking zones containing induction elements with different ratings and diameters (**Fig. 2.4**) each with a pan detector and residual heat indicator, and a Rangetop control display.

The Rangetop control display (**Fig. 2.5**) informs you of the following induction Rangetop functions:

- U Pan Detector
- H Residual Heat Indicator
- A Automatic Heat-up
- L Child Lock
- Low Temperature/Simmer Setting
  - 36" - L1/L2/L3
  - 48" - L1/L2
- P Power Boost Setting
- ON Advises user one or more zones are active

Pan detector, U

IMPORTANT: After use, switch off the Rangetop element by its control and DO NOT RELY on the pan detector.

If a cooking area is switched on and there is no pan in place or if the pan is too small for the cooking area, then no heat will be generated. The symbol [U]will appear on the Rangetop control display; this is the "pan-missing symbol". Place a pan of the correct size on the cooking area and the [U] will disappear and cooking can begin. After 10 minutes without detecting a pan the cooking zone will switch off automatically.

Table 2.1 shows the minimum pan sizes recommended for each cooking zone.

NOTE: Using pans with a base diameter smaller than those recommended will result in a power reduction.

Residual heat indicator

After use, a cooking zone will remain hot for a period of time as heat dissipates. When a cooking zone is switched off the residual heat indicator symbol [H], will appear in the display. This shows that the cooking zone temperature is above 140 °F (60 °C) and may still cause burns. Once the temperature has dropped to below 140 °F (60 °C) the [H] will go out.

Automatic heat-up

This function is available on all of the cooking zones. It allows rapid heating to bring the selected cooking zone up to temperature. The zone will maintain 100 % power (level 9) for the specified time and then automatically reduce power to the preset level. The function is selected by turning the control knob to the 'A' position. This can be selected by turning the control knob momentarily counter-clockwise from the zero position until the symbol [A] is shown on the Rangetop control display.

Once the [A] is displayed, turn the control knob to the level of your choice (1 to 9). The pan will heat up at 100% power for a specified time before the power is reduced to the level selected.

When the Automatic Heat-up function is activated, the Rangetop control display will flash alternately between the [A] setting and the chosen power level.

Once the Automatic Heat-up time has ended the Rangetop display will stop flashing and will show the chosen power level.

The Automatic Heat-up function can be stopped by either turning the control knob back to the "0" power setting or turning the control knob to the "9" power setting.

For your guidance **Table 2.2** shows the time available at 100% power depending on the power level selected in the Automatic Heat-up mode.

Power level	Automatic Heat-up Time at 100% (min:sec)
1	0:48
2	2:24
3	3:50
4	5:12
5	6:48
6	2:00
7	2:48
8	3:36

Table 2.2

Child lock

To prevent unwanted use by children, the Rangetop can be locked.

⚠ **IMPORTANT: This can only be activated when all the cooking zones are switched off.**

To lock the Rangetop, simultaneously turn the two left-hand controls counter-clockwise (**Fig. 2.6**) and hold until the L symbol appears in the center of the Rangetop control display (**Fig. 2.7**).

NOTE: [A] will flash when locking the Rangetop – this is normal.

To unlock the Rangetop, simultaneously turn the two left-hand controls counter-clockwise and hold until the L symbol disappears from the center of the Rangetop control display.

Fig. 2.6

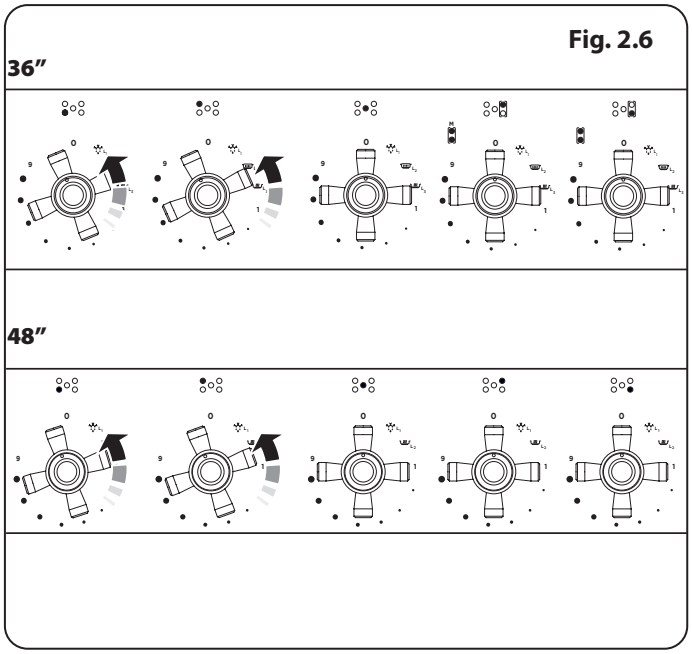

Fig. 2.7

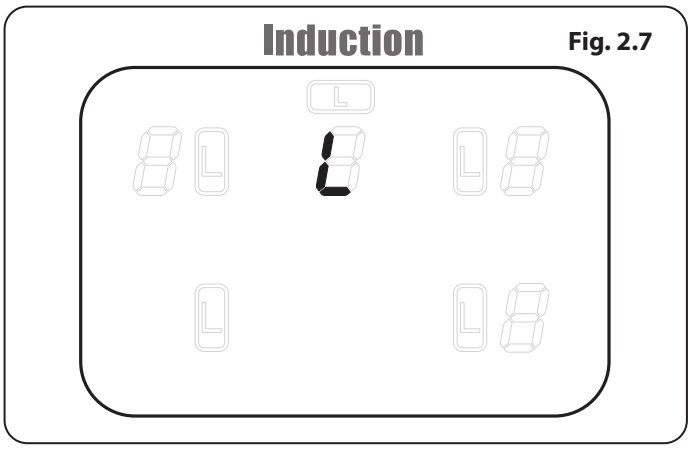

Power Level	Maximum Operating Time
L1, L2 and L3	*2 hours*
1	*6 hours*
2	*6 hours*
3	*5 hours*
4	*5 hours*
5	*4 hours*
6	*1.5 hours*
7	*1.5 hours*
8	*1.5 hours*
9	*1.5 hours*
Power Boost	*10 minutes*

Table 2.3

Fig. 2.8

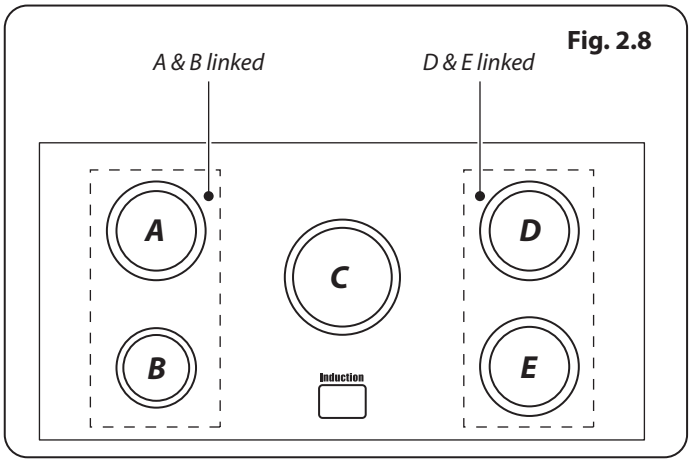

Low temperature/simmer setting

This function should only be used when heating from cold.

Each cooking zone is equipped with 3 low temperature settings for 36" and 2 settings for 48":

- *L1* will maintain a temperature of about 104 °F (40 °C) – ideal for gently melting butter or chocolate.
- *L2* will maintain a temperature of about 194 °F (90 °C) – ideal for simmering (bring the pan to the boil and then select *L2* to keep soups, sauces, stews, etc. at an optimal simmer).
- *L3* will maintain a temperature of about 201.2 °F (94 °C) – ideal for simmering (bring the pan to the boil and then select *L3* to keep soups, sauces, stews, etc at an optimal simmer).

The maximum time this setting can be used is 2 hours, after which the Rangetop will switch off automatically. If required, you can immediately restart the Low Temperature function by reactivating *L1* , *L2* or *L3*. To increase the heat, just turn the control knob to the required level.

The maximum times for all other power levels are shown in **Table 2.3**.

Power boost setting

All of the induction cooking zones have Power Boost available, activated by turning the control knob clockwise until [*P*] is shown on the Rangetop control display.

Power Boost allows additional power to be made available for each of the cooking zones. This is useful to bring a large pan of water to the boil quickly.

The Power Boost function operates for a maximum of 10 minutes on each zone, after which the power is automatically reduced to setting 9.

When using the Power Boost function, the cooking zones are linked.

Fig. 2.8 shows the Rangetop layout. Zones A and B are linked together as are zones D and E.

This means that when using zone A on Power Boost and then switching zone B to Power Boost, the power to zone A will reduce slightly. The last zone switched to Power Boost always takes priority. Zones D and E work in the same way. Zone C is not shared.

This is a built-in safety device.

Deactivate the Power Boost function by turning the control knob to a lower setting.

Please remember not to leave the Rangetop unattended. Care should be taken to not allow your cookware to boil dry. Damage to your cookware and Induction Glass Rangetop may result.

Please read and follow the manufacturers' instructions carefully before using cookware on your induction Rangetop.

The Bridging-Zone Function (36” only)

Zones D and E can be bridged, creating an area, ideal for use with an induction griddle (not supplied).

Note: The griddle should comprise of an induction friendly, flat bottom, large enough to cover zones D and E of the hotplate heating area (**Fig. 2.9**).

DO NOT use zones A, B or C to heat the griddle (**Fig. 2.10**).

To activate the bridging-zone function, simultaneously turn the two right-hand controls completely clockwise (**Fig. 2.11**) and hold until the [⊓] symbols appear in the centre of the cooktop control display (**Fig. 2.12**). The temperature can then be adjusted using the right-hand knob (**Fig. 2.13**).

Turn both knobs counter-clockwise to cancel the dualzone function and return to normal operation.

⚠ **DO NOT turn the two right-hand knobs individually to heat the griddle. This can cause excessive temperatures and damage the coating on the griddle.**

Fig. 2.9

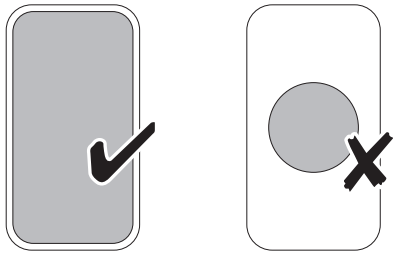

Fig. 2.10

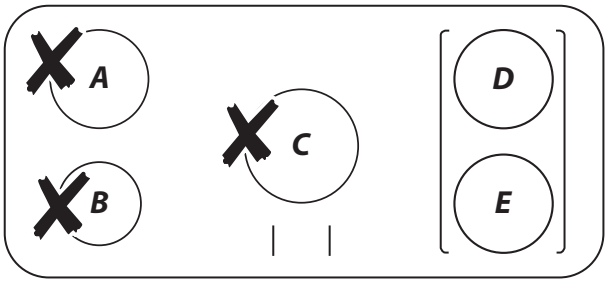

Fig. 2.11

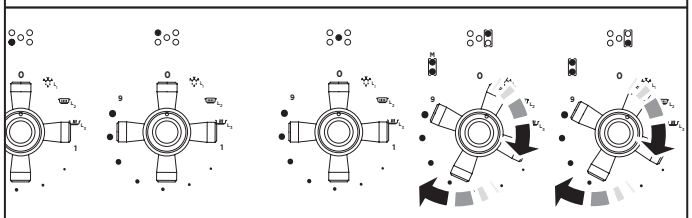

Fig. 2.12

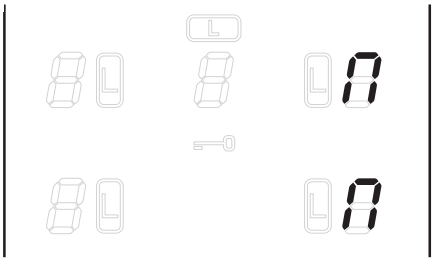

Fig. 2.13

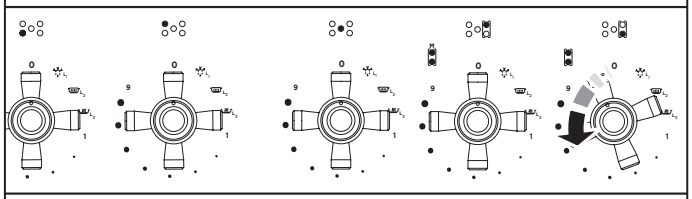

3. Cleaning your Rangetop

Essential information

⚠ **Before thorough cleaning, turn off the circuit breaker. Allow the Rangetop to cool.**

⚠ **After cleaning remember to switch on the circuit breaker before using the Rangetop.**

⚠ **NEVER use paint solvents, caustic cleaners, biological powders, bleach, chlorine based bleach cleaners, coarse abrasives or salt.**

⚠ **DO NOT mix different cleaning products – they may react together with hazardous results.**

⚠ **A steam cleaner is NOT to be used.**

Recommended cleaning materials are shown in **Table 3.1**

Rangetop

Daily care

First of all, make sure that all heat indicator lights are off and that the cooking surface is cool. Clean the surface with hot soapy water or a non-abrasive cleaner if necessary. As a final step, wipe the cooking surface with a clean, dry paper towel.

Cleaning spills

For spills and boil-overs that occur while cooking, turn the unit off and wipe the area surrounding the hot zone with a clean paper towel. If a spill (other than a sugary substance) is on the hot zone, do not clean until the unit has completely cooled down, and then follow the instructions below ('Cleaning Burned-on Spills').

If you accidentally melt anything on the surface, or if you spill foods with a high sugar content (preserves, tomato sauce, fruit juice, etc.), remove the spill IMMEDIATELY with a razor scraper, while the unit is still hot.

⚠ **IMPORTANT: Use an oven glove to protect your hand from potential burns.**

Scrape the major spill or melted material from the cooking zone and push into a cold area. Then, turn the unit 'OFF' and allow it to cool before cleaning further. After the cooking surface cools down and the heat indicator lights go off, follow the 'Daily Care' procedure outlined above.

Cleaning burned-on spills

Make sure that the heat indicator lights are off and that the Rangetop is cool. Remove the excess burned-on substance with a single-edged razor scraper. Hold the scraper at an angle of about 30° to the surface and then scrape off the burned-on matter.

AGA care and cleaning

Supplies can be found at www.aga-ranges.com and purchased by calling AGA Kitchen Concierge on (800) 525 - 5601.

Cleaning table

Cleaners listed (**Table 3.1**) are available from supermarkets or online.

For enamel surfaces use a cleaner that is approved for use on vitreous enamel.

Regular cleaning is recommended. For easier cleaning, wipe up any spillages immediately.

Rangetop		
Part	**Finish**	**Recommended Cleaning Method**
Rangetop surface	High temperature glass	Hot soapy water, non-abrasive cleaner if necessary.
Outside of Rangetop		
Part	**Finish**	**Recommended Cleaning Method**
Sides and trim	Stainless steel surface	Hot soapy water, soft cloth. Enamel cleaner or chrome & steel cleaner respectively, if necessary.
Rear trim stainless	Stainless steel	Hot soapy water, soft cloth. Cream cleaner, with care, if necessary.
Control panel	Enamel or stainless steel	Warm soapy water. Do not use abrasive cleaners on lettering.
Control knobs	Mercury knobs are aluminum	Warm soapy water, soft cloth. Chrome & steel cleaner if necessary.

Table 3.1

4. Troubleshooting

⚠ All servicing and repairs must be carried out by an authorized service technician.

NOTE: The induction Rangetop is able to self-diagnose a number of problems and can show this information to the user via the Rangetop control display. Error codes may be displayed if your Rangetop has developed a fault.

If your appliance reports an error or is not working, you may be able to correct the fault by consulting the following.

Error code E2 is displayed

The electronic unit is too hot. Please check the installation of the Rangetop, making sure that there is sufficient ventilation. In extreme cases, if a cooking utensil has been allowed to boil dry this error code may also be displayed. If in doubt, please contact your qualified installer or an authorized service technician.

No display operation

Over voltage or loss of supply voltage to the Rangetop. If in doubt, please contact your qualified installer or an authorized service technician.

Error code U400 is displayed

The Rangetop has been incorrectly connected. The control will switch off after approximately 1 second and the error code will be permanently displayed.

Consult your qualified installer or an authorized service technician.

Error code Er followed by a number is displayed

The appliance has developed an internal technical fault that cannot be rectified by the user.

Consult your qualified installer or an authorized service technician.

The fuse blows or the RCD trips regularly

Consult your qualified installer or an authorized service technician.

The Rangetop will not switch on

Has the wiring system in the house blown a fuse or tripped an earth leakage circuit breaker?

Has the Rangetop been correctly connected to the mains supply?

The induction Rangetop is noisy

When using the induction Rangetop there may be some 'noise' emitted from the pan. This is normal and may be most noticeable when cooking on high power settings or if 5 pans are used simultaneously. This type of pan may also contribute to induction 'noise'.

What cleaning materials are recommended for the Rangetop?

See the 'Cleaning' section for a full list of recommended cleaning materials.

⚠ We DO NOT recommend corrosive or caustic cleaners as these may damage your Rangetop.

If there is an installation problem and I don't get my original installer to come back to fix it who pays?

You do. Service organizations will charge for their call outs if they are correcting work carried out by your original installer. It is in your interest to track down your original installer.

5. Installation Instructions

The following symbols are related to Safety and are used on the product and throughout this manual.

Meaning / Description	Symbol
WARNING / CAUTION An appropriate safety instruction should be followed or caution to a potential hazard exists.	
DANGEROUS VOLTAGE To indicate hazards arising from dangerous voltages.	
PROTECTIVE EARTH (GROUND) To identify any terminal which is intended for connection to an external conductor for protection against electric shock in case of a fault, or the terminal of a protective earth (ground) electrode.	

Meaning / Description	Symbol
HEAVY This product is heavy and reference should be made to the safety instructions for provisions of lifting and moving.	
DISCONNECT MAINS SUPPLY Disconnect incoming supply before inspection or maintenance.	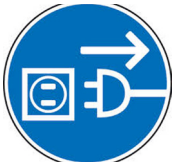

READ THESE INSTRUCTIONS FULLY BEFORE USE
SAVE THESE INSTRUCTIONS FOR FUTURE REFERENCE SAVE THE INSTALLATION INSTRUCTIONS FOR THE LOCAL ELECTRICAL INSPECTOR'S USE

6. Service and parts

Firstly, please complete the appliance details below and keep them safe for future reference – this information will enable us to accurately identify the particular appliance and help us to help you. Filling this in now will save time and inconvenience if you later have a problem with the appliance. It may also be of benefit to keep your purchase receipt with this leaflet. You may be required to produce the receipt to validate a warranty field visit.

Dealer's Name and Address	
Name of Appliance	
Appliance Serial Number*	
Fuel Type	
Date of Purchase	
Installer's Name, Address and Telephone No.	
Date of Installation	

* This information is on the appliance data badge.

If you have a problem

In the unlikely event that you have a problem with your appliance, please refer to the rest of this booklet, especially the problem solving section, first to check that you are using the appliance correctly.

If you are still having difficulty, please contact Tech Support at 800.914.4799 or email techsupp@middlebyresidential.com .

Please note

For warranty information or to register your AGA Rangetop, email customersupport@middlebyresidential.com. You may also refer to the warranty document provided with the appliance or contact 888.845.4641 Option 3 .

Out of warranty

We recommend that our appliances are serviced regularly throughout their life to maintain the best performance and efficiency. The frequency of service will depend on usage – for normal usage once a year should suffice. Service work should only be carried out by an authorized service technician.

Spare parts

To maintain optimum and safe performance, we recommend that only genuine spare parts are used. **DO NOT** use re-conditioned or unauthorized controls. Contact 888.845.4641 Option 1 or email parts@middlebyresidential.com .

7. Installation safety instructions

Regulations

Installation of this Rangetop must conform with local codes.

This Rangetop has been designed and certified to the requirements of UL 858 & CSA C22.2 E60335-2-6.

This appliance is to be installed in accordance with National, regional and electrical codes by a qualified person.

The Rangetop must be electrically grounded in accordance with local codes or, in the absence of local codes, in accordance with the National Electrical Code (NFPA 70, latest edition). In Canada, electrical grounding must be in accordance with the current CSA C22.1 Canadian Electrical Code Part 1 and/or local codes.

IMPORTANT!

Observe all governing codes and ordinances.

Save these instructions for the local electrical inspector's use.

For your safety

DO NOT store or use combustible materials, gasoline or other flammable vapors and liquids in the vicinity of this or any other appliance.

This appliance must be grounded.

Isolate electrical supply before installation.

This appliance is heavy. Ensure you have the correct facilities to complete the move. To find the weight of the appliance refer to the "Technical data".

Ensure all clearances are followed. Refer to "Positioning the Rangetop".

Improper installation, adjustment, alteration, service or maintenance can cause injury or property damage. Refer to this manual. For assistance or additional information, consult a qualified, appointed AGA Service Agent.

IMPORTANT!

Remove all packing material and literature before connecting the electrical supply to Rangetop.

Have your Rangetop installed by a qualified installer.

Your Rangetop must be electrically grounded in accordance with local codes or, in the absence of local codes, in accordance with the National Electrical Code (NFPA 70, latest edition).

DO NOT install your Rangetop on a substrate that cannot withstand 180 °F (82 °C).

Make sure the wall coverings around the Rangetop can withstand heat generated by the Rangetop up to 200 °F (93 °C).

Avoid placing cabinets above the Rangetop. There must be a gap of at least 30" (762 mm) between the top of the Rangetop and any combustible surface above it.

If a ventilation hood is installed above the Rangetop follow the installation instructions supplied with the hood.

Items of interest to children should not be stored above a Rangetop – children climbing on the Rangetop to reach items could be seriously injured.

To eliminate the risk of burns or fire by reaching over heated surface units, cabinet storage space located above the surface units should be avoided.

Location of the Rangetop

The Rangetop may be installed in a kitchen/kitchen dining area but **NOT** in a room containing a bath or shower.

IMPORTANT - Make sure the wall coverings around your Rangetop can withstand the heat generated (up to 200°F) by the Rangetop. (See the Installation Safety Instructions section).

8. Installation

Fig. 8.1

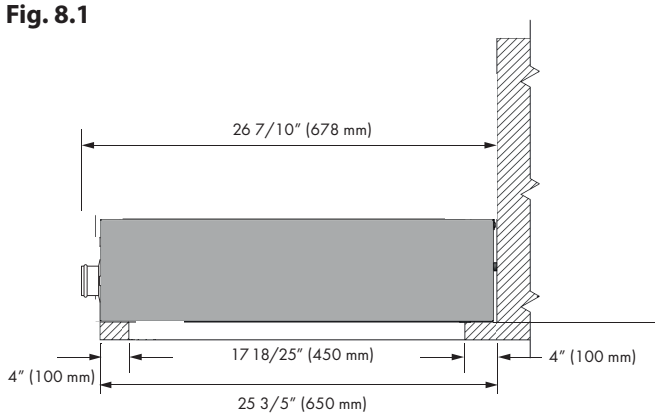

Fig. 8.2

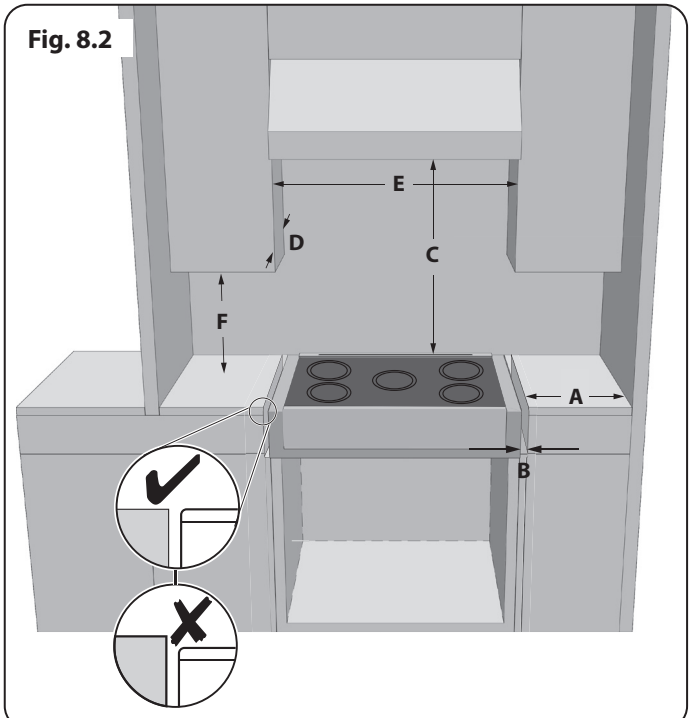

You will need the following equipment to complete the Rangetop installation satisfactorily:

- Multimeter (for electrical checks).

You will also need the following tools:

1. Steel tape measure
2. Screwdriver
3. Level
4. Jigsaw

Positioning the Rangetop

⚠ **Do not position the Rangetop above a built-in appliance.**

Fig. 8.1 to **Fig. 8.48** show the minimum recommended distance from the Rangetop to nearby combustible surfaces (see **Table 8.1**).

We recommend a gap of no more than 3⁄16" (5 mm) (see **Table 8.1**) either side of the appliance for moving the Rangetop. It must be possible to move the Rangetop in and out for cleaning and servicing.

Rangetop should be level with, or above, any adjacent countertop (**Fig. 8.1**).

*Any rangehood should be installed in accordance with the hood manufacturer's instructions.

**Any splashback must be fitted in accordance with the manufacturer's instructions. Allowance should be made for the additional height of the flue trim, which is fitted to the Rangetop.

Surfaces of furniture and walls at the sides and rear of the appliance should be heat, splash and steam resistant. Certain types of vinyl or laminate kitchen furniture are particularly prone to heat damage and discoloration.

We cannot accept responsibility for damage caused by normal use of the Rangetop to any material that de-laminates or discolors at temperatures less than 149°F/65°C above room temperature.

Table 8.1

Clearances to combustibles

Dimension	Description	36"		48"	
		USA	Canada	USA	Canada
A	Gap between side of appliance and adjacent vertical surface ABOVE Rangetop level	1 3⁄16" (30 mm) [1]	1 3⁄16" (30 mm) [1]	1 3⁄16" (30 mm) [1]	1 3⁄16" (30 mm) [1]
B	Gap between side of appliance and adjacent vertical surface BELOW Rangetop level	3⁄16" (5 mm)	1⁄2" (12 mm)	3⁄16" (5 mm)	1⁄2" (12 mm)
C	Gap between Rangetop level and any horizontal combustible surface	31 1⁄2" (800 mm) [2]	31 1⁄2" (800 mm) [2]	31 1⁄2" (800 mm) [2]	31 1⁄2" (800 mm) [2]
D	Maximum depth of cabinets installed above the top surface cooking sections	13" (330 mm)	13" (330 mm)	13" (330 mm)	13" (330 mm)
E	Minimum distance between horizontal surfaces less than dimension C	35 1⁄2" (901.7 mm)	35 1⁄2" (901.7 mm)	47 7⁄16" (1208 mm)	47 7⁄16" (1208 mm)
F	Minimum distance between horizontal cabinets and worktop surfaces adjacent to Rangetop	16 5⁄32" (410 mm)	16 5⁄32" (410 mm)	16 5⁄32" (410 mm)	16 5⁄32" (410 mm)

[1] For non-combustible surfaces (such as unpainted metal or ceramic tiles) this gap is not required

[2] This dimension can be reduced to 24" (610 mm) if the bottom of the wooden or painted metal cabinet is preserved with a non-combustible material; when bottom of wood or metal cabinet is protected by not less than 1/4-inch-thick flame-retardant millboard covered with not less than No. 28 MSG sheet steel, 0.015-inchthick stainless steel, 0.024-inch-thick aluminum, or 0.020-inch-thick copper

Countertop cutout dimensions for 36" rangetop

Fig. 8.3

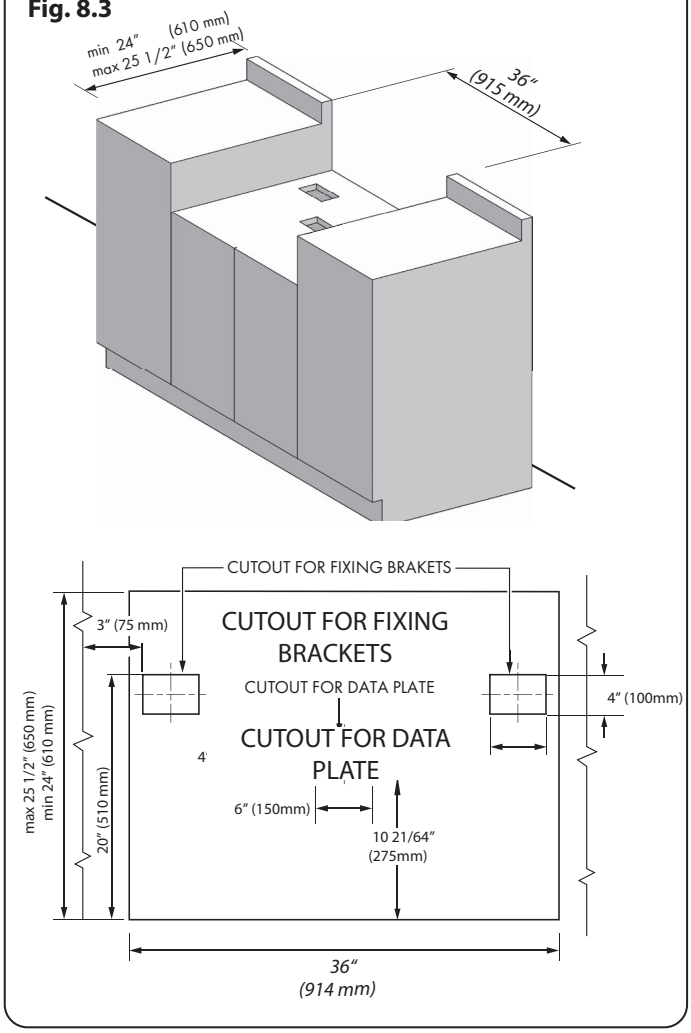

Fig. 8.4

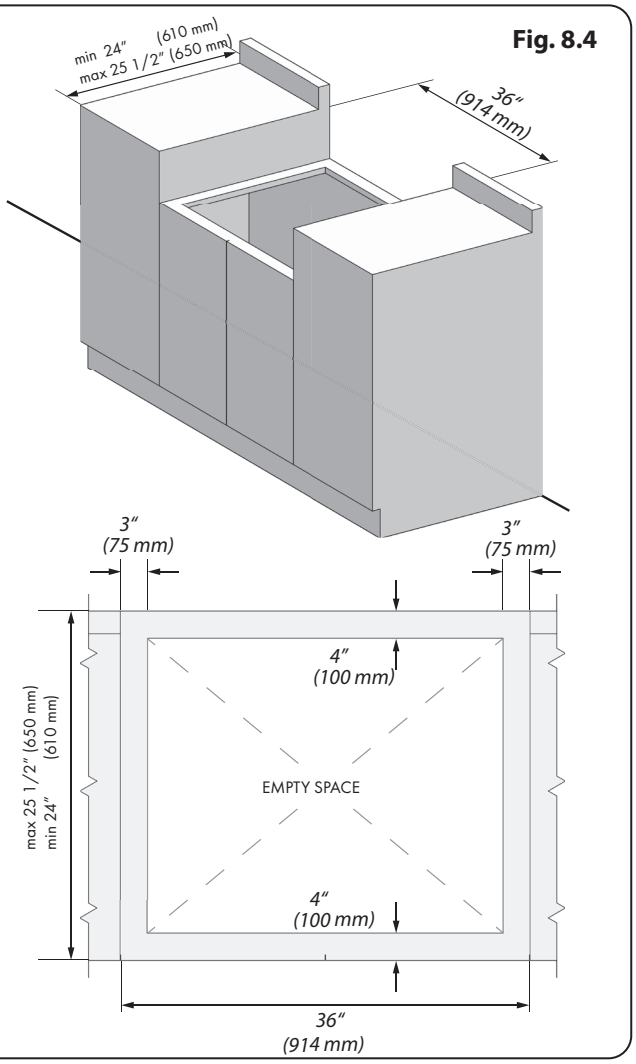

Countertop cutout dimensions for 48" rangetop

Fig. 8.5

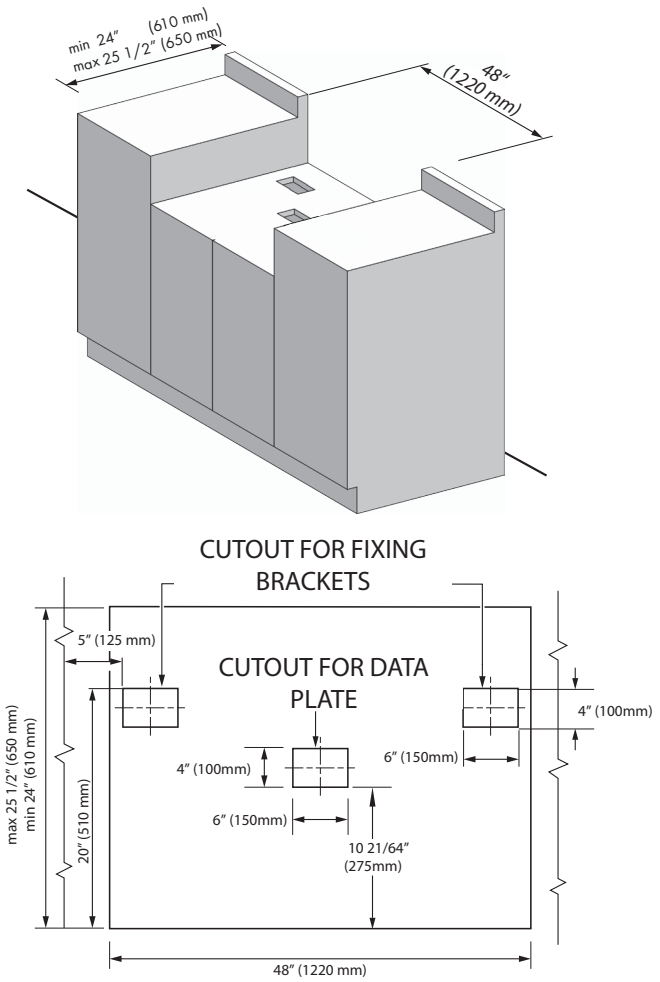

Fig. 8.6

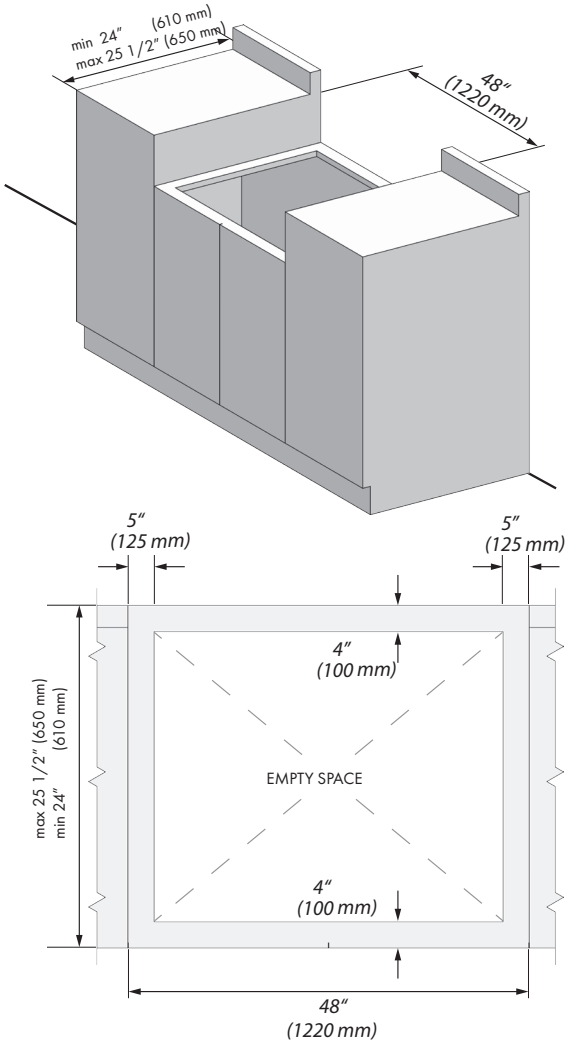

Fig. 8.7

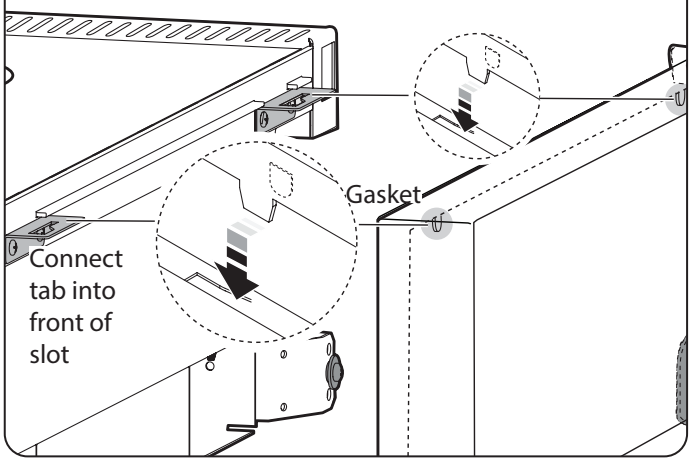

Fig. 8.8

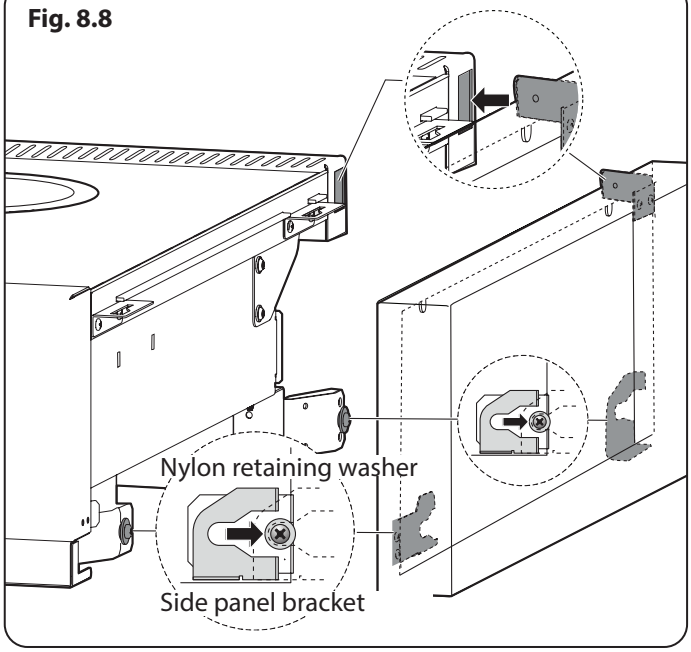

Fig. 8.9

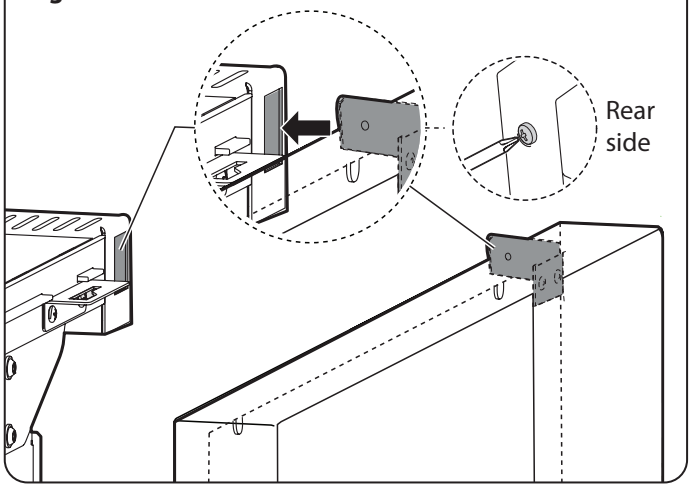

Fitting the side panels for 48"

1. Inside the top of the side panel top are two tabs. Attach the self-adhesive gaskets to each tab and connect these tabs into the cut-outs in the top edge of the Rangetop (**Fig. 8.7**).
2. Align and insert the slotted tab at the top rear and slide the side panel so that the **side panel bracket** in the base connects to the **rear retaining washer** (**Fig. 8.8**).
3. Check everything is firmly connected and tighten the screw at the rear side of the side panel to secure in position (**Fig. 8.9**).

NOTE: The bottom front of the side panels will be loose. These are secured once the bottom panel (toe kick) is fitted.

NOTE: If a side panel is loose, fit one of the extra gaskets to the inner face of the front bracket locating tabs and refit.

Install and secure the Rangetop

1. Slide the Rangetop into place (**Fig. 8.10**).
2. Inserting the clamping screw into the two clamp brackets.
3. Attach the brackets by using the attachment screws on the selected location of the buner box. Then, tighten the screws to securely hold brackets in place (**Fig. 8.11**).
4. Position brackets so that they are in contact with the Rangetop bottom.
5. Tighten attachment screws.
6. Check the front edge of the Rangetop is in parallel to the front edge of the countertop before finally tighten up the screw.

NOTE: Do not over tighten.

Fig. 8.10

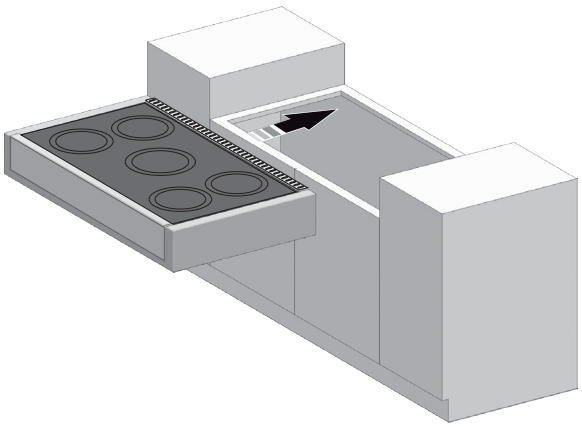

Fig. 8.11

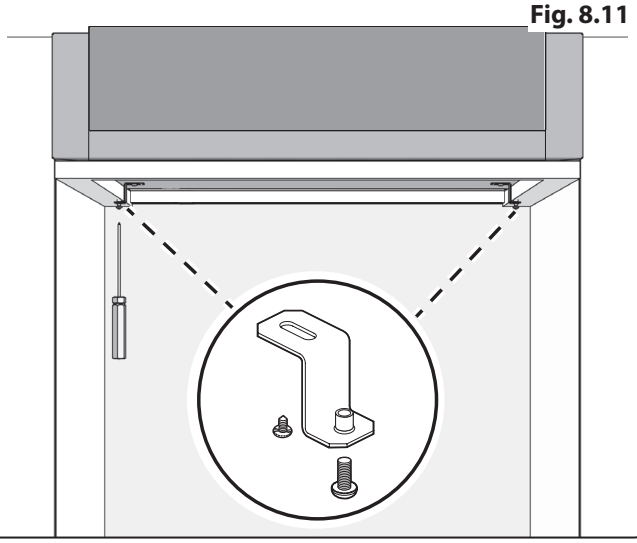

9. Electrical connection

Electrical requirements

⚠ **For personal safety, DO NOT use an extension cord with this appliance. Remove the house fuse or open the circuit breaker before beginning installation.**

⚠ **WARNING Electrical Grounding Instructions. This rangetop does not require a neutral connection. Your rangetop must be connected to the proper electrical voltage and frequency as specified in the "Technical data" on page 23**

⚠ **Prior to connection inspect the cable for any damage that may have occurred. In the event of damage please consult your electrical installer.**

⚠ **Ensure that the cable is routed so that it cannot become damaged during the installation.**

⚠ **WARNING: Product is not suitable for a plug attachment connection.**

Have your appliance properly installed and grounded by a qualified installer. The installation must conform with local codes or, in the absence of local codes, in accordance with the National Electrical Code ANSI/NFPA 70 or the Canadian Electric Code, CSA C22.1.

This appliance must be supplied with the proper voltage and frequency, and connected to an individual, properly grounded branch circuit, protected by a circuit breaker or time-delay fuse, as noted on the rating plate.

Wiring must conform to National Electric Codes. If the electric service provided does not meet the above specifications have a licensed electrician install the product.

Because Rangetop terminals are not accessible after Rangetop is in position, flexible service conduit or cable must be used.

Provide proper electrical supply

This Rangetop must be supplied with 240 V 60 Hz, and connected to an individual, properly grounded branch circuit protected supply. If the electrical service provided does not meet the above specifications, it is recommended that a qualified electrician install an approved outlet.

This should be connected to an appropriate Branch Circuit protected supply. **NOTE** - load diversity factor has been applied in accordance with NFPA 70 article 220.

Connecting using the supplied cable and conduit

Your Rangetop is shipped with a cable and conduit, 2 metres in length, to be connected to your branch circuit.

The product should only be installed by a qualified installer.

DISCONNECT THE ELECTRICAL SUPPLY.

To access the electrical connections, undo the screws and remove the electrical cover (**Fig. 9.1**).

The conduit comes with a push to fit connection terminal on both ends for strain relief. Please ensure both ends are pushed in and secure before use.

4 wire cable connection

Connect the new power leads as per the **Fig. 9.2**, they should be connected to the outside terminals. Ensure the clamp is tight and the connection is secure before use.

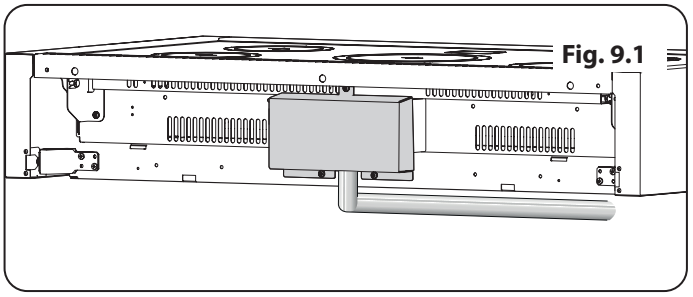

Fig. 9.1

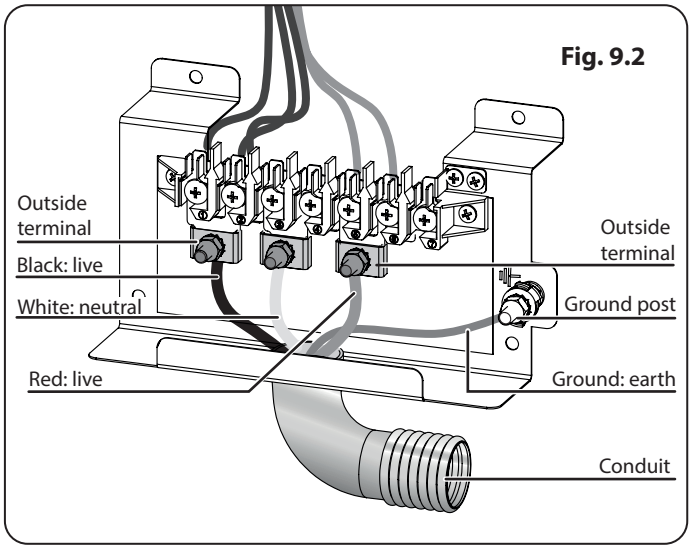

Fig. 9.2

10. Circuit diagram

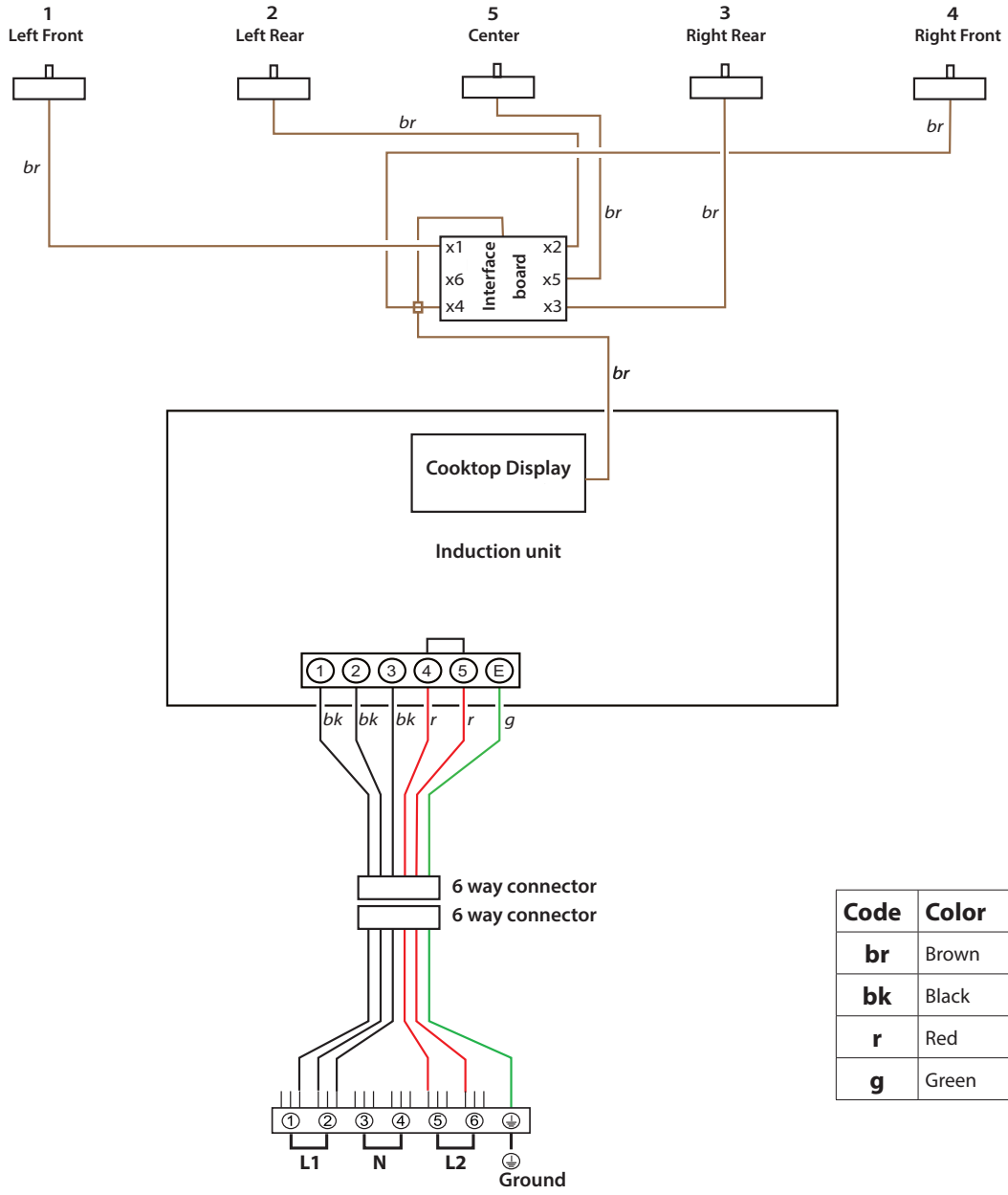

Code	Color
br	Brown
bk	Black
r	Red
g	Green

11. Technical data

INSTALLER: Please leave these instructions with the owner.

DATA BADGE LOCATION: At the bottom of the unit.

COUNTRY OF DESTINATION: USA, Canada, Mexico.

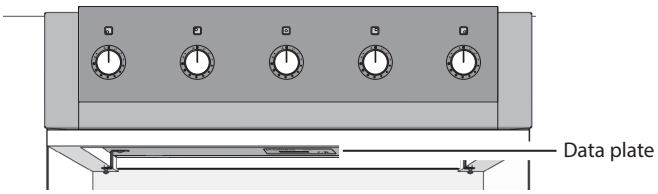

Connections

Electric Supply	240 V 60 Hz
Electric Rating	240V (2 Wire + Grd), 60Hz, 11.4 kW *
Branch Circuit Protection	50 A *
Connection Type	NEMA 14-50 P
Maximum total electric load 240 V * Load demand diversity calculation according to NFPA 70 article 220.	11.4 kW*

Dimensions

	48" Induction Rangetop	**36" Induction Rangetop**
Overall width	47 9⁄16" (1208 mm); see 'Positioning of Rangetop'.	35 ½" (900mm); see 'Positioning of Rangetop'.
Overall depth	26 7⁄10" (678 mm)	26 7⁄10" (678 mm)
Minimum space for Rangetop	48 " (1220 mm)	31 ½" (800mm)
Weight (unpacked)	132 LBS (60 Kg)	90 LBS (40 Kg)

Rangetop ratings

Rangetop Zone	Max	Boost
Front Left	1.40 kW	2.20 kW
Rear Left	1.85 kW	3.00 kW
Center	2.30 kW	3.70 kW
Front Right	1.85 kW	3.00 kW
Rear Right	1.85 kW	3.00 kW

CONSUMER WARRANTY

ENTIRE PRODUCT – LIMITED TWO-YEAR WARRANTY

Any cosmetic faults must be reported within 7 days of installation.

AGA warrants the replacement or repair of all parts of this product which prove to be defective in material or workmanship, with the exception of the painted or porcelain enamel finish or plated surfaces, for two-year from the date of original purchase. Such parts will be repaired or replaced at the option of AGA without charge, subject to the terms and conditions set out below.

The warranty period against defects in the painted or porcelain enamel finish, or plated surfaces, is 90 days from the date of original purchase.

TERMS AND CONDITIONS

1. This warranty applies only for single family domestic use when the range has been properly installed according to the instructions supplied by AGA and is connected to an adequate and proper utility service.

Damage due to faulty installation, improper usage and care, abuse, accident, fire, flood, acts of God, commercial, business or rental use, and alteration, or the removal or defacing of the serial plate, cancels all obligations of this warranty. Service during this warranty must be performed by a factory Authorized Service Technician.

2. **The warranty applies to product only in the country in which it was purchased.**
3. AGA is not liable for any claims or damages resulting from any failure of the range or from service delays beyond their reasonable control.
4. To obtain warranty service, the original purchaser **must** present the original Bill of Sale, Model and Serial number. Components repaired or replaced are warranted through the remainder of the original warranty period only.
5. The warranty does not cover expenses involved in making this appliance readily accessible for servicing.
6. This warranty gives you specific legal rights. Additional warranty rights may be provided by law in some areas.
7. Adjustments such as calibrations, leveling, tightening of fasteners, or utility connections normally associated with original installation are the responsibility of the dealer or installer and not that of the Company.

TO ENSURE PROMPT WARRANTY SERVICE, SEND IN YOUR WARRANTY CARD WITHIN 10 DAYS OF PURCHASE.

If further help is needed concerning this warranty, contact:

PLACE OF PURCHASE _____

DATE OF PURCHASE _____

SERIAL NUMBER _____

MODEL NUMBER _____

Middleby Residential
4960 Golden Pkwy
BLDG 3
Buford, GA 30518
Business 770.932.7282
Fax 770.932.7292
Toll Free Telephone 800.241.9152



Middleby Residential
4960 Golden Pkwy
BLDG 3
Buford, GA 30518
Business 770.932.7282
Fax 770.932.7292
Toll Free Telephone 800.241.9152