Clothes Dryer

Electric and Gas Models

Installation/Operation

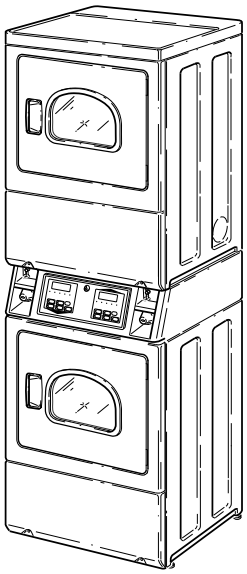

DRY722C_SVG

Original Instructions

Keep These Instructions for Future Reference.

CAUTION: Read the instructions before using the machine.

(If this machine changes ownership, this manual must accompany machine.)

Alliance™ Laundry Systems

www.alliancelaundry.com

Part No. D516906ENR6
July 2026

WARNING

WARNING



Risk of fire. Highly flammable material.

W881


Read all instructions before using unit.

WARNING

FOR YOUR SAFETY, the information in this manual must be followed to minimize the risk of fire or explosion or to prevent property damage, personal injury or death.

W033

WARNING

- **Do not store or use gasoline or other flammable vapors and liquids in the vicinity of this or any other appliance.**
- **WHAT TO DO IF YOU SMELL GAS:**
  - **Do not try to light any appliance.**
  - **Do not touch any electrical switch; do not use any phone in your building.**
  - **Clear the room, building or area of all occupants.**
  - **Immediately call your gas supplier from a neighbor's phone. Follow the gas supplier's instructions.**
  - **If you cannot reach your gas supplier, call the fire department.**
- **Installation and service must be performed by a qualified installer, service agency or the gas supplier.**

W052

IMPORTANT: Purchaser must consult the local gas supplier for suggested instructions to be followed if the dryer user smells gas. The gas utility instructions plus the SAFETY and WARNING note directly above must be posted in a prominent location near the dryer for customer use.

WARNING

- **Installation of unit must be performed by a qualified installer.**
- **Install clothes dryer according to manufacturer's instructions and local codes.**
- **DO NOT install a clothes dryer with flexible plastic venting materials. If flexible metal (foil type) duct is installed, it must be of a specific type identified by the appliance manufacturer as suitable for use with clothes dryers. Refer to section on connecting exhaust system. Flexible venting materials are known to collapse, be easily crushed, and trap lint. These conditions will obstruct clothes dryer airflow and increase the risk of fire.**

W729R1

WARNING

To reduce the risk of severe injury or death, follow all installation instructions. Save these instructions.

W894

WARNING

FOR YOUR SAFETY

Do not store or use gasoline or other flammable vapors and liquids in the vicinity of this or any other appliance.

W053

© Copyright, Alliance Laundry Systems LLC -
DO NOT COPY or TRANSMIT

WARNING



Models with electronic control:

- INGESTION HAZARD: **This product contains a non-replaceable button cell or coin battery.**
  - **Battery Type: CR-2450/VAN, CR-2354/VCN, CR2032**
  - **Nominal voltage: 3V**
- DEATH **or serious injury can occur if ingested.**
- **A swallowed button cell or coin battery can cause Internal Chemical Burns in as little as 2 hours.**
- **KEEP new and used batteries OUT OF REACH of CHILDREN.**
- **Seek immediate medical attention if a battery is suspected to be swallowed or inserted inside any part of the body.**

W1076

WARNING

- **Fire Hazard**
- **Failure to follow safety warnings exactly could result in serious injury, death or property damage.**
- **Do not install a booster fan in the exhaust duct.**
- **Install all clothes dryers in accordance with the installation instructions of the manufacturer of the dryer.**

W1082

This product uses FreeRTOS V7.2.0 (www.freertos.org).

The following information applies to the state of Massachusetts, USA.

- This appliance can only be installed by a Massachusetts licensed plumber or gas fitter.
- This appliance must be installed with a 36 inch [910 mm] long flexible gas connector.
- A “T-Handle” type gas shut-off valve must be installed in the gas supply line to this appliance.
- This appliance must not be installed in a bedroom or bathroom.

EPA EST. NO.:101050-WI-1

Some internal components contain PFAS.



© Copyright, Alliance Laundry Systems LLC -
DO NOT COPY or TRANSMIT

Table of Contents

Safety Information 7
Explanation of Safety Instruction Messages 7
Important Safety Instructions 7

Dimensions 9

Installation 12
Before You Start 12
Supplies 12
Additional Security 12
Position and Level the Dryer 12
Connect Dryer Exhaust System 14
Exhaust Direction 15
Exhaust System 15
Multi-Dryer Installation Exhaust Requirements 16
Gas Dryers - Connect Gas Supply Pipe 18
Electric Dryer Only - Connect Electrical Plug 19
Earth/Ground Information 19
Connecting Power Cord with Three-Wire Plug 21
Connecting Power Cord with Four-Wire Plug 23
Reverse Door, if Desired 24
Wipe Out Inside of Dryer 25
Plug In the Dryer 25
Electric Dryer 26
Gas Dryer 26
Earth/Ground Information 26
Recheck Steps 27
Check Heat Source 27
Electric Dryers 27
Gas Dryers 27

Vending 29
Coin Slide Guards 29
Coin Slide and Non-Metered Models 29
Setting Dry Time Dipswitches 29
Dipswitch Settings 31
Test Setting 33
Slide Extension Assembly 33
Installing Coin Slide Assembly Into Meter Case: Option One 34

© Copyright 2026, Alliance Laundry Systems LLC
All rights reserved. No part of the contents of this book may be reproduced or transmitted in any form or by any means without the expressed written consent of the publisher.

Installing Coin Slide Assembly Into Meter Case: Option Two 34

Operation 36
Operation Instructions for Nonmetered and Coin Slide Dryers 36
Clean Lint Filter 36
Load Laundry 36
Close Loading Door 36
Determine Proper Dryer 36
Set Fabric Selector 36
Start Dryer 37
Nonmetered Models 37
Coin Slide Models 37
Operation Instructions for MDC Dryers 37
Clean Lint Filter 37
Load Laundry 37
Close Loading Door 38
Determine Proper Dryer 38
Set Fabric Selector 38
Insert Coins or Card 38
To Insert Coins 38
To Insert Card 38
Start Dryer 38
Indicator Lights 39

Maintenance 40
Lubrication 40
Care of Your Dryer 40
Dryer Interior 40
Cabinet 40
Control Panel 40
Exhaust System 40
Lint Filter 40
Motor Overload Protector 40
For Energy Conservation 41

Troubleshooting 42

Contact Information 44

Installer Checklist 45

© Copyright, Alliance Laundry Systems LLC -

Safety Information

Explanation of Safety Instruction Messages

Precautionary statements ("DANGER," "WARNING," and "CAUTION"), followed by specific instructions, are found in this manual and on machine decals. These precautions are intended for the personal safety of the operator, user, servicer, and those maintaining the machine.

DANGER

Indicates an imminently hazardous situation that, if not avoided, will cause severe personal injury or death.

WARNING

Indicates a hazardous situation that, if not avoided, could cause severe personal injury or death.

CAUTION

Indicates a hazardous situation that, if not avoided, may cause minor or moderate personal injury or property damage.

Additional precautionary statements ("IMPORTANT" and "NOTE") are followed by specific instructions.

IMPORTANT: The word "IMPORTANT" is used to inform the reader of specific procedures where minor machine damage will occur if the procedure is not followed.

NOTE: The word "NOTE" is used to communicate installation, operation, maintenance or servicing information that is important but not hazard related.

Important Safety Instructions

Save These Instructions

WARNING

To reduce the risk of fire, electric shock, serious injury or death to persons when using your dryer, follow these basic precautions:

W130

- Read all instructions before using the dryer.
- Install this dryer according to the INSTALLATION INSTRUCTIONS. Refer to the EARTH/GROUND INSTRUCTIONS in the INSTALLATION manual for the proper earth/ground connection of the dryer. All connections for electrical power, earth/ground and gas supply must comply with local codes and be made by licensed personnel when required. Do not do it yourself.
- Do not install or store the dryer where it will be exposed to water and/or weather.
- Do not dry articles that have been previously cleaned in, washed in, soaked in, or spotted with gasoline or machine oils, vegetable or cooking oils, cleaning waxes or chemicals, dry-cleaning solvents, thinner, anything containing chemicals such as in mops and cleaning cloths, or other flammable or explosive substances as they give off vapors that could ignite, explode or cause fabric to catch on fire by itself.
- Do not place items exposed to cooking oils in your dryer. Items contaminated with cooking oils may contribute to a chemical reaction that could cause a load to catch fire. To reduce the risk of fire due to contaminated loads, the final part of a tumble dryer cycle occurs without heat (cool down period). Avoid stopping a tumble dryer before the end of the drying cycle unless all items are quickly removed and spread out so that the heat is dissipated.
- Items that have been soiled with substances such as cooking oil, acetone, alcohol, petrol, kerosene, spot removers, turpentine, waxes and wax removers, should be washed in hot water with an extra amount of detergent before being dried in the tumble dryer.
- To reduce the risk of fire, DO NOT DRY plastics or articles containing foam or latex rubber or similarly textured rubber-like materials, such as shower caps, water proof textiles, rubber-backed articles, and clothes or pillows filled with foam rubber pads.
- Do not tumble fiberglass curtains and draperies unless the label says it can be done. If they are dried, wipe out the cylinder with a damp cloth to remove particles of fiberglass.
- Do not allow children to play on or in the dryer. Close supervision of children is necessary when the dryer is used near children. This appliance is not intended for use by persons (including children) with reduced physical, sensory or mental capabilities, or lack of experience and knowledge, unless they have been given supervision or instruction concerning the use of the appliance by a person responsible for their safety. This is a safety rule for all appliances.
- Cleaning and user maintenance shall not be made by children without supervision.
- Children less than three years should be kept away unless continuously supervised.
- Models with electronic control: Remove and immediately recycle or dispose of used controls according to local regulations and keep away from children. Do NOT dispose of controls in the trash or incinerate. Do not attempt to remove the batteries. Even used batteries may cause severe injury or death. Call a local poison control center for treatment information. Non-rechargeable batteries are not to be recharged.

© Copyright, Alliance Laundry Systems LLC -
DO NOT COPY or TRANSMIT

Do not force discharge, recharge, disassemble, heat above 70ºC [158ºF] or incinerate. Doing so may result in injury due to venting, leakage or explosion resulting in chemical burns.

- Do not reach into the dryer if the cylinder is revolving.
- Use the dryer only for its intended purpose, drying clothes. ALWAYS follow the fabric care instructions supplied by the garment manufacturer and only use the dryer drum to dry textiles that have been washed in water.
- Always read and follow manufacturer's instructions on packages of laundry and cleaning aids. Heed all warnings or precautions. To reduce the risk of poisoning or chemical burns, keep them out of reach of children at all times (preferably in a locked cabinet).
- Do not use fabric softeners or products to eliminate static unless recommended by the manufacturer of the fabric softener or product.
- Remove laundry immediately after the dryer stops.
- DO NOT operate the dryer if it is smoking, grinding or has missing or broken parts or removed guards and/or panels. DO NOT tamper with the controls or bypass any safety devices.
- DO NOT operate individual units if they have been separated from a stack unit.
- Dryer will not operate with the loading door open. DO NOT bypass the door safety switch by permitting the dryer to operate with the door open. The dryer will stop tumbling when the door is opened. Do not use the dryer if it does not stop tumbling when the door is opened or starts tumbling without pressing the START mechanism. Remove the dryer from use and call the service person.
- ALWAYS clean the lint filter after every load. A layer of lint in the filter reduces drying efficiency and prolongs drying time. Keep area around the exhaust opening and adjacent surrounding area free from the accumulation of lint, dust and dirt. The interior of the dryer and the exhaust duct should be cleaned periodically by qualified service personnel.
- Do not repair or replace any part of the dryer, or attempt any servicing unless specifically recommended in the user-maintenance instructions or in published user-repair instructions that you understand and have the skills to carry out. ALWAYS disconnect the electrical power to the dryer before attempting service. Disconnect the power cord by grasping the plug, not the cord.
- Electric Models: If supply cord is damaged, it must be replaced by a special cord or assembly available from the manufacturer or its service agent.
- Gas Models: If supply cord is damaged, it must be replaced by the manufacturer, its service agent or similarly qualified persons in order to avoid a hazard.
- Before the dryer is removed from service or discarded, remove the door to the drying compartment.
- Failure to install, maintain, and/or operate this machine according to the manufacturer's instructions may result in conditions which can produce bodily injury and/or property damage.

NOTE: The WARNING and IMPORTANT SAFETY INSTRUCTIONS appearing in this manual are not meant to cover all possible conditions and situations that may occur. Observe and be aware of other labels and precautions that are located on the machine. They are intended to provide instruction for safe use of the machine. Common sense, caution and care must be exercised when installing, maintaining, or operating the dryer.

Always contact your dealer, distributor, service agent or the manufacturer about any problems or conditions you do not understand.

© Copyright, Alliance Laundry Systems LLC -
DO NOT COPY or TRANSMIT

Dimensions

Electric Dryers

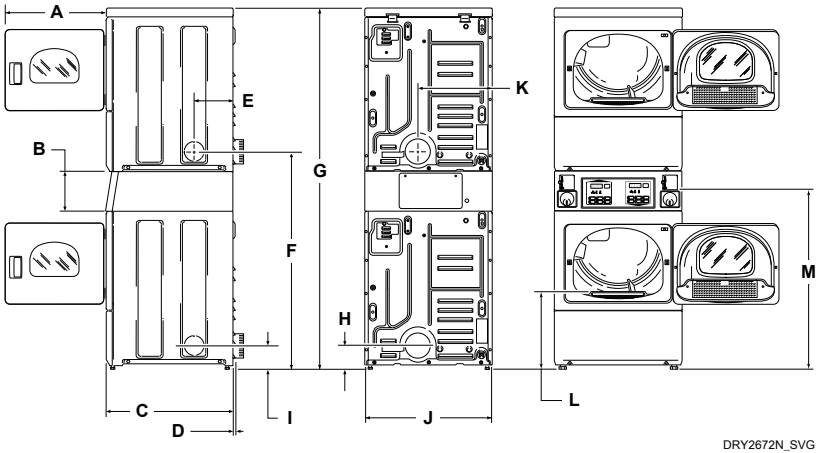

A	23.5 in. [597 mm]
B	8.375 in. [213 mm]
C	28 in. [711 mm]
D	0.4 in. [11 mm]
E	8 in. [203 mm]
F	46.62 in. [1184 mm]
G	* 78.17 in. [1986 mm]
H	* 4 in. [102 mm]
I	* 4.5 in. [114 mm]
J	26.875 in. [683 mm]
K	15.4 in. [391 mm]
L	* 15.44 in. [392 mm]
M	* 39.13 in. [994 mm]
NOTE: Exhaust openings are 4 inch [102 mm] metal ducting.	* With leveling legs turned into base.

© Copyright, Alliance Laundry Systems LLC -
DO NOT COPY or TRANSMIT

Gas Dryers

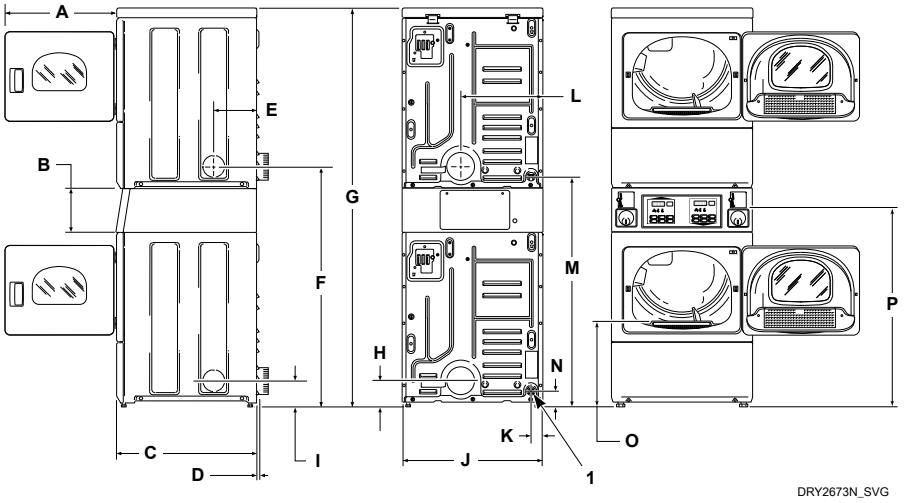

1. 3/8 in. N.P.T. Gas Connection

A	23.5 in. [597 mm]
B	8.375 in. [213 mm]
C	28 in. [711 mm]
D	0.4 in. [11 mm]
E	8 in. [203 mm]
F	46.62 in. [1184 mm]
G	* 78.17 in. [1986 mm]
H	* 4 in. [102 mm]
I	* 4.5 in. [114 mm]
J	26.875 in. [683 mm]
K	2.3 in. [60 mm]
L	15.4 in. [391 mm]
M	* 44.87 in. [1140 mm]
N	* 2.8 in. [70 mm]
O	* 15.44 in. [392 mm]
P	* 39.13 in. [994 mm]
NOTE: Exhaust openings are 4 inch [102 mm] metal ducting.	* With leveling legs turned into base.

NOTE: Gas models cannot be vented out left side of cabinet because of burner housing.

© Copyright, Alliance Laundry Systems LLC -
DO NOT COPY or TRANSMIT

IMPORTANT: The dryer should have sufficient clearance around it for needed ventilation and for the ease of installation and servicing. For maximum drying performance, we recommend that more clearance be allowed around the dryer than the clearances that are listed throughout this manual.

© Copyright, Alliance Laundry Systems LLC -
DO NOT COPY or TRANSMIT

Installation

Before You Start

Supplies

For most installations, the basic supplies you will need are:

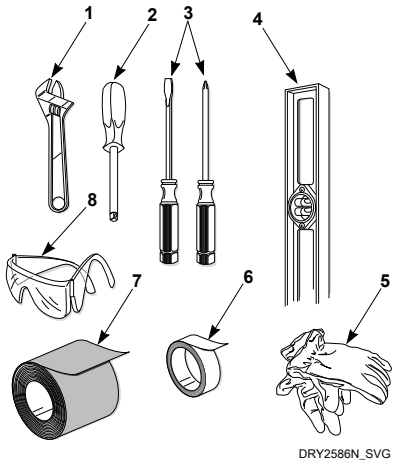

1. Wrench
2. 1/4 inch Driver
3. Screwdrivers
4. Level
5. Gloves
6. Teflon Tape
7. Duct Tape
8. Safety Glasses

Figure 1

NOTE: This appliance is suitable for use in countries having a warm, damp climate.

WARNING

Any disassembly requiring the use of tools must be performed by a suitably qualified service person.

W299

Additional Security

Torx security screws are available (as optional equipment at extra cost) for securing lower access panel to each dryer base.

Order part number 62853.

A Torx bit, part number 282P4, is available (as optional equipment at extra cost) for installing the Torx security screws.

A Torx bit holder, part number 24161, is available (as optional equipment at extra cost) to be used with the Torx bit.

Position and Level the Dryer

1. Install the four rubber feet (in accessories bag).
2. Select a location with a solid floor. Dryers installed in residential garages must be elevated 18 inches [457 mm] above the floor.

   No other fuel burning appliance should be installed in the same closet with the dryer.

   The dryer must not be installed or stored in an area where it will be exposed to water and/or weather.

   The dryer needs sufficient clearance and an adequate air supply for proper operation and ventilation, and for easier installation and servicing. (Minimum clearances are shown in *Figure 3*).
3. Place the dryer in position, and adjust the legs until the dryer is level from side to side and front to back. Leveling legs can be adjusted from inside the dryer with a 1/4 in. driver.
4. All four legs must rest firmly on the floor so the weight of the dryer is evenly distributed. The dryer must not rock.

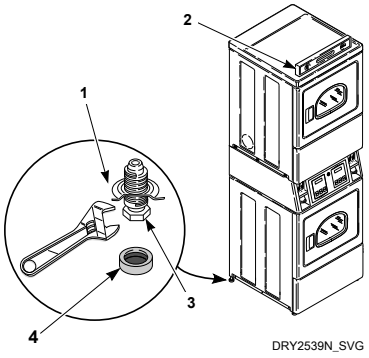

1. Dryer Base
2. Level
3. Leveling Leg
4. Rubber Foot

Figure 2

© Copyright, Alliance Laundry Systems LLC -
DO NOT COPY or TRANSMIT

Front View

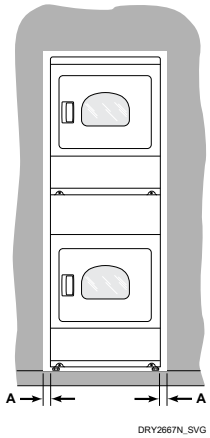

Side View

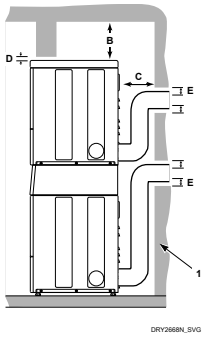

1. Outer Wall of Enclosure

Figure 3

Area	Description	Free Standing/Alcove Installation
A	Dryer sides	0 in. [0 mm]
B	Dryer top (rear 24 in. [610 mm])	12 in. [305 mm]
C*	Dryer rear	4 in. [102 mm]
D	Dryer Top (front 4 in. [201 mm])	0.5 in. [13 mm]
E	Exhaust duct clearance to combustible material	2 in. [51 mm]
*	Rear clearance is minimum. 6 inches [152 mm] is recommended when venting through rear of unit.	

Table 1

© Copyright, Alliance Laundry Systems LLC -
DO NOT COPY or TRANSMIT

NOTE: For new installations, it is suggested to locate top of wall vent 42 inches (106.7 cm) above floor to make venting easier to connect.

IMPORTANT: In mobile home installations, gas dryers MUST be permanently attached to the floor at the time of installation. Order No. 526P3 Hold Down Kit (available at extra cost) for a manufactured (mobile) home installation. Follow the instructions supplied with the kit.

Installation of unit must conform to the Manufactured Home Construction and Safety Standards, Title 24 CF4, Part 32-80 or Standard CAN/CSA-Z240 MH.

IMPORTANT: Unless completely assembled, DO NOT slide the dryer unit across the floor. DO NOT slide the unit once the leveling legs have been extended, as the legs and the base could become damaged.

Connect Dryer Exhaust System

WARNING

To reduce the risk of fire and combustion gas accumulation the dryer MUST be exhausted to the outdoors.

W604

WARNING

To reduce the risk of fire and the accumulation of combustion gases, DO NOT exhaust dryer air into a window well, gas vent, chimney or enclosed, unventilated area, such as an attic, wall, ceiling, crawl space under a building or concealed space of a building.

W045

WARNING

To reduce the risk of fire, DO NOT use plastic or thin foil ducting to exhaust the dryer.

W354

WARNING

To reduce the risk of fire, the exhaust duct and weather hood MUST be fabricated of a material that will not support combustion. Rigid or flexible metal pipe is recommended for a clothes dryer.

W048

WARNING

To reduce the risk of fire due to increased static pressure, we do not recommend installation of third party in-line secondary lint filters or lint collectors. If secondary systems are mandated, frequently clean the system to assure safe operation.

W749R1

WARNING

Risk of fire. Do not install a booster fan in the exhaust duct.

W1072

NOTE: The booster fan warning does not apply to clothes dryers intended to be installed in a multiple clothes dryer system, with an engineered exhaust duct system that is installed per the clothes dryer manufacturer's guidelines.

IMPORTANT: Installing in-line filters or lint collectors will cause increased static pressure. Failure to maintain the secondary lint system will decrease dryer efficiency and will void machine warranty.

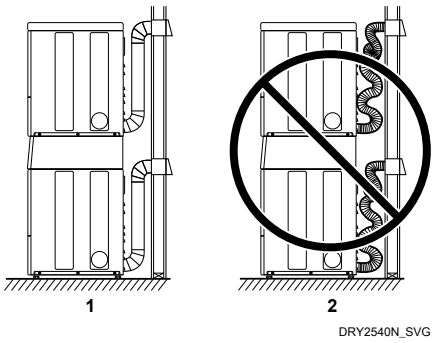

1. Correct
2. Incorrect

Figure 4

- DO NOT use plastic, thin foil or type B ducting. Rigid metal duct is recommended.
- Locate dryer so exhaust duct is as short as possible.
- Be certain old exhaust ducts are cleaned before installing your new dryer.
- Use 4 inch [102 mm] diameter rigid or flexible metal duct.
- The male end of each section of duct must point away from the dryer.
- Use as few elbows as possible.

© Copyright, Alliance Laundry Systems LLC - DO NOT COPY or TRANSMIT

- Use of duct tape or pop-rivets on all seams and joints is recommended, if allowed by local codes. DO NOT use sheet metal screws or fasteners on exhaust pipe joints which extend into the duct and catch lint.
- Securely fasten the exhaust duct to the structure.
- Ductwork that runs through unheated areas must be insulated to help reduce condensation and lint build-up on pipe walls.
- Install backdraft dampers in multi-dryer installations.
- In mobile home installations, dryer exhaust duct must be secured to mobile home structure.
- Dryer exhaust duct MUST NOT terminate under mobile home.
- Exhaust duct must not be connected to any other duct, vent, or chimney.
- Dryer exhausts 220 cfm per unit (measured at back of dryer).
- DO NOT install flexible duct in concealed spaces, such as a wall or ceiling.
- Static pressure in exhaust duct should not be greater than 0.6 inches water column [1.5 cm water column] , measured with manometer placed on exhaust duct 2 feet [610 mm] from dryer (check with dryer running and no load). In multi-dryer installations, all dryers connected to the main collector duct should be operating when pressure is checked.
- Exhausting dryer in hard-to-reach locations can be done by installing 521P3 Flexible Metal Vent Kit (available as optional equipment at extra cost).
- Sufficient make-up air must be supplied to replace the air exhausted by the dryer. The free area of any opening for outside air must be at least 40 in. ^{2} [25806 mm ^{2}] per unit.
- Energy efficient buildings with low air infiltration rates should be equipped with an air exchanger that can accommodate on demand make-up air needs in the laundry room. These devices can be obtained through your building contractor or building material suppliers.
- Do not draw make-up air from a room containing a gas fired water heater, a dry cleaner or a hair salon.
- Failure to exhaust dryer properly will void warranty.
- A dryer will dissipate 60 Btu/ft ^{2} [681,392 J/m ^{2}] of surface area exposed to the conditioned air.

NOTE: Venting materials are not supplied with the dryer (obtain locally).

IMPORTANT: DO NOT block the airflow at the bottom of the dryer's front panel with laundry, rugs, etc. Blockage will decrease airflow through the dryer, thus reducing the efficiency of the dryer.

Exhaust Direction

The dryer can be exhausted to the outdoors through the back, left, right or bottom of the dryer. EXCEPTION: Gas dryers cannot be vented out the left side because of the burner housing.

Dryer is shipped from factory ready for rear exhaust.

Exhausting the dryer through sides or bottom can be accomplished by installing a Directional Exhaust Kit, 528P3, available as optional equipment at extra cost.

Exhaust System

For best drying results, recommended maximum length of exhaust system is shown in *Table 2*.

To prevent backdraft when dryer is not in operation, outer end of exhaust pipe must have a weather hood with hinged dampers (obtain locally).

NOTE: Weather hood should be installed at least 12 inches [305 mm] above the ground. Larger clearances may be necessary for installations where heavy snowfall can occur.

Number of 90° Elbows	Weather Hood Type	
	Recommended	Use Only for Short Run Installations
	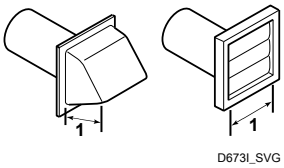 1. 4 in. [102 mm]	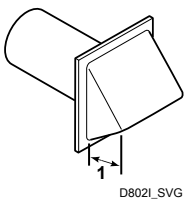 1. 2.5 in. [64 mm]
Maximum length of 4 in. [102 mm] diameter rigid metal duct.		
0	65 feet [19.8 m]	55 feet [16.8 m]

continues...

Table 2

© Copyright, Alliance Laundry Systems LLC -
DO NOT COPY or TRANSMIT

Number of 90° Elbows	Weather Hood Type	
	Recommended	Use Only for Short Run Installations
1	55 feet [16.8 m]	47 feet [14.3 m]
2	47 feet [14.3 m]	41 feet [12.5 m]
3	36 feet [11.0 m]	30 feet [9.1 m]
4	28 feet [8.5 m]	22 feet [6.7 m]

Table 2

NOTE: Deduct 6 feet [1.8 m] for each additional elbow.

NOTE: The maximum length of a 4 in. [102 mm] diameter flexible metal duct must not exceed 7.87 ft. [2.4 m] , as required to meet UL2158, clause 7.3.2.A.

Multi-Dryer Installation Exhaust Requirements

Figure 5 shows a typical example of a multiple dryer installation. Note how each dryer has its own exhaust system vented to the central exhaust duct.

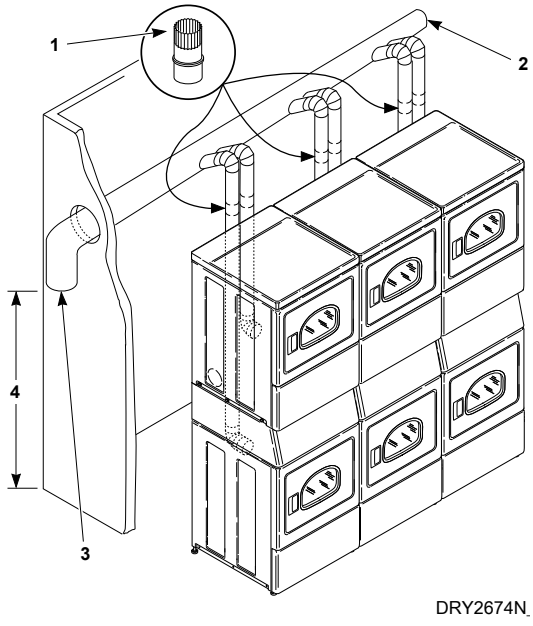

1. 58786 Backdraft Damper (Available through your local authorized parts source)
2. Clean Out Cover (Must be provided). Inspect monthly.
3. Weather Hood or Sweep Elbow (No cap or screen)
4. 24 in. [610 mm] Minimum Clearance to Roof/Ground

Figure 5

© Copyright, Alliance Laundry Systems LLC -
DO NOT COPY or TRANSMIT

Horizontal Exhaust Installation: Exhaust Air Flow Maximum Length of Duct 30 feet [9.1 m]

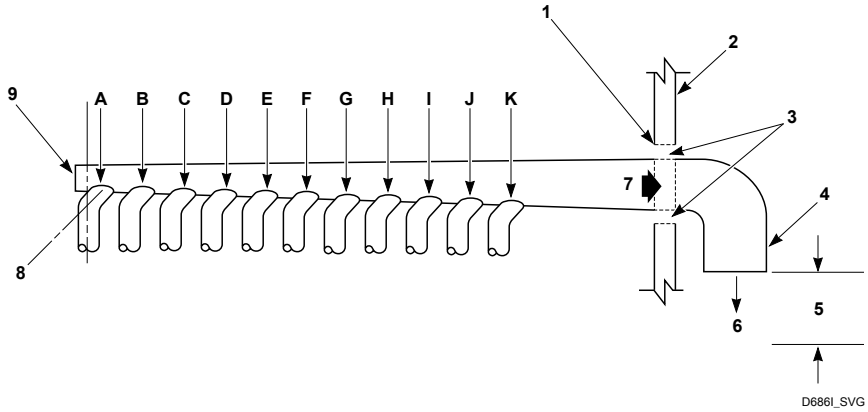

1. Where the exhaust duct pierces a combustible wall or ceiling, the opening must be sized per local codes.
2. Wall
3. 2 in. [50 mm] Minimum or Clearance per Local Codes
4. No Screen or Cap
5. 24 in. [610 mm] Minimum Clearance to Roof/Ground
6. Exhaust Outlet
7. Air Flow
8. 30 °
9. Clean Out Cover - Inspect Monthly

Figure 6

Duct Station	Minimum Diameter of Collector Duct
A	4 inches [102 mm]
B	8 inches [203 mm]
C	9 inches [229 mm]
D	10 inches [254 mm]
E	11 inches [279 mm]
F	12 inches [305 mm]
G	13 inches [326 mm]
H	14 inches [356 mm]
I	15 inches [381 mm]
J	15 inches [381 mm]
K	16 inches [406 mm]

Table 3

Vertical Exhaust Installation

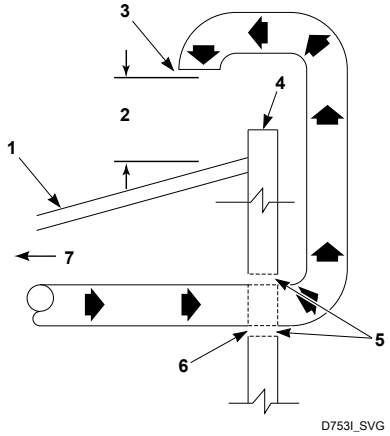

1. Roof
2. 24 in. [610 mm] Minimum Clearance to Roof/Ground
3. No Screen or Cap
4. Wall
5. 2 in. [50 mm] Minimum
6. Where the exhaust duct pierces a combustible wall or ceiling, an opening must be sized as shown or per local codes.
7. Connect to Dryer

Figure 7

© Copyright, Alliance Laundry Systems LLC -
DO NOT COPY or TRANSMIT

WARNING

To reduce the risk of fire and the accumulation of combustion gases, DO NOT exhaust dryer air into a window well, gas vent, chimney or enclosed, unventilated area, such as an attic, wall, ceiling, crawl space under a building or concealed space of a building.

W045

A Backdraft Damper, Part No. 58786 (obtain locally),should be installed in a 4 inch [102 mm] diameter VERTICAL duct system. This will prevent a backdraft when dryer is not in use, and will keep the exhaust air in balance within the central exhaust system.

Gas Dryers - Connect Gas Supply Pipe

WARNING

To reduce the risk of gas leaks, fire or explosion:

- **Each dryer must be connected to the type of gas as shown on nameplate located in the door recess.**
- **Use a new flexible stainless steel connector.**
- **Use pipe joint compound insoluble in L.P. (Liquefied Petroleum) Gas, or Teflon tape, on all pipe threads.**
- **Purge air and sediment from gas supply line before connecting it to the dryer. Before tightening the connection, purge remaining air from gas line to each dryer until odor of gas is detected. This step is required to prevent gas valve contamination.**
- **Do not use an open flame to check for gas leaks. Use a non-corrosive leak detection fluid.**
- **Any disassembly requiring the use of tools must be performed by a suitably qualified service person.**

W315

1. Make certain your dryer is equipped for use with the type of gas in your laundry room. Dryer is equipped at the factory for Natural Gas with a 3/8 inch NPT gas connection.

   NOTE: The gas service to a gas dryer must conform with the local codes and ordinances, or in the absence of local codes and ordinances, with the latest edition of the National Fuel Gas Code ANSI Z223.1/NFPA 54 or the CAN/CSA-B149.1 Natural Gas and Propane Installation Code.

   Natural Gas, 1000 Btu/ft ^{3} [37.3 MJ/m ^{3}] , service must be supplied at minimum 5.0 inch water column pressure to maximum 10.5 inch water column pressure.

   For proper operation at altitudes above 2000 feet [610 m] the natural gas valve spud orifice size must be reduced to ensure complete combustion. Refer to *Table 4*.

Natural Gas Altitude Adjustments			
Altitude	**Orifice Size**		**Part Number**
feet [m]	**#**	**inches [mm]**	
2,000 [610]	41	0.0960 [2.44]	D503776
3,000 [915]	42	0.0935 [2.37]	D503777
5,500 [1,680]	43	0.0890 [2.26]	D503778
7,000 [2,135]	44	0.0860 [2.18]	58719
9,000 [2,745]	45	0.0820 [2.08]	D503779
10,500 [3,200]	46	0.0810 [2.06]	D503780

Table 4

2. Remove the shipping cap from the gas connection at the rear of the dryer. Make sure you do not damage the pipe threads when removing the cap.
3. Connect to gas supply pipe using thread sealant or Teflon tape. Torque 90 - 175 inch-pounds [10.2 - 19.7 Nm] .

   NOTE: The connection of gas supply to the appliance shall be made with a flexible hose suitable for the appliance category in accordance with national installation regulations of the country of destination. If in doubt contact the dryer distributor or manufacturer.

   NOTE: When connecting to a gas line, an equipment shut-off valve in accordance with the National Fuel Gas Code, ANSI Z223.1/NFPA 54 and the Natural Gas and Propane Installation Code, CSA B149.1 must be installed within 6 feet [1.8 m] of the dryer. An 1/8 in. NPT pipe plug must be installed as shown for checking inlet pressure. Refer to *Figure 8*.

   Starting Serial No. 1908000001, the following must be furnished and installed by the customer for the gas service line to dryer: Union at gas supply connection (listed to ANSI Z21.24 and CSA 6.10).

© Copyright, Alliance Laundry Systems LLC - DO NOT COPY or TRANSMIT

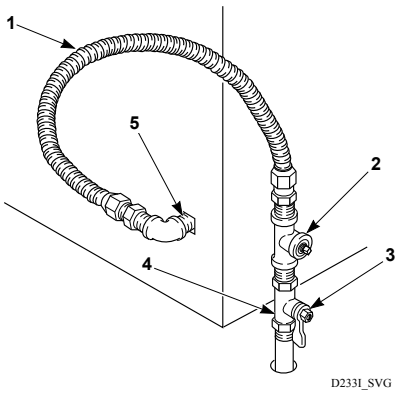

1. New Stainless Steel Flexible Connector – (Use design CSA certified connector) Use only if allowed by local codes

2. 1/8 in. NPT Pipe Plug

3. Equipment Shut-Off Valve

4. Black Iron Pipe:

Shorter than 20 ft. [6.1 m] – Use 3/8 in. [9.5 mm] pipe.

Longer than 20 ft. [6.1 m] – Use 1/2 in. [12.7 mm] pipe.

5. 3/8 in. NPT Gas Connection

Figure 8

4. Tighten all connections securely but don't overtighten to avoid breaking or bending the gas valve bracket. Turn on gas and check all pipe connections (internal & external) for gas leaks with a non-corrosive leak detection fluid.

NOTE: The dryer and its appliance main gas valve must be disconnected from the gas supply piping system during any pressure testing of that system at test pressures in excess of 1/2 psi [3.45 kPa] . Refer to *Check Heat Source*.

NOTE: DO NOT connect the dryer to L.P. Gas Service without converting the gas valve. Install L.P. Gas Conversion Kit 458P3, available at extra cost.

L.P. (Liquefied Petroleum) Gas, 2500 Btu/ft. ^{3} [93.1 MJ/m ^{3}] , service must be supplied at 10 ± 1.5 inch water column pressure.

For proper operation at altitudes above 3500 feet [1070 m] the L.P. gas valve spud orifice size must be reduced to ensure complete combustion. Refer to *Table 5*.

L.P. Altitude Adjustments			
Altitude	**Orifice Size**		**Part No.**
feet [m]	**No.**	**inches [mm]**	
3500 [1070]	54	0.0550 [1.40]	D503785

continues...

Table 5

L.P. Altitude Adjustments			
Altitude	**Orifice Size**		**Part No.**
feet [m]	**No.**	**inches [mm]**	
7500 [2290]	55	0.0520 [1.32]	58755
11000 [3355]	56	0.0465 [1.18]	D503786

Table 5

Electric Dryer Only - Connect Electrical Plug

Dryer requires 120/240 Volt or 120/208 Volt, 60 Hertz, 3 or 4 wire electrical supply. Refer to serial plate for specific electrical requirements.

IMPORTANT: Use only a new U.L. listed No. 10 (copper wire only) three or four conductor power supply cord kit rated 240 Volts (minimum) 30 Amperes and labeled as suitable for use in a clothes dryer.

NOTE: The wiring diagram is located behind the control panel, inside the control cabine

WARNING

To reduce the risk of fire, electric shock, serious injury or death, all wiring and grounding MUST conform with the latest edition of the National Electrical Code, ANSI/NFPA 70, or the Canadian Electrical Code, CSA C22.1, and such local regulations as might apply. It is the customer's responsibility to have the wiring and fuses installed by a qualified electrician to make sure adequate electrical power is available to the dryer.

W521

Earth/Ground Information

This appliance must be properly connected to protective earth/ground. In the event of malfunction or breakdown, the earth/ground will reduce the risk of electric shock by providing a path of least resistance for electric current.

The cord-kit must be equipped with a cord having an equipment-earth/ground conductor and an earth/ground plug. The plug must be plugged into an appropriate outlet that is properly installed and connected to a protective earth/ground in accordance with all local codes and ordinances.

© Copyright, Alliance Laundry Systems LLC - DO NOT COPY or TRANSMIT

WARNING

Improper connection of the equipment earth/ground conductor can result in a risk of electric shock. Check with a qualified electrician or service person if you are in doubt as to whether the dryer is properly connected to a protective earth/ground.

W886

Do not modify the plug provided with the cord-kit - if it will not fit the outlet, have a proper outlet installed by a qualified electrician.

The dryer has its own terminal block that must be connected to a separate branch, 60 Hertz, single phase circuit, AC (alternating current) circuit, fused at 30 Amperes (the circuit must be fused on both sides of the line). Electrical service for the dryer should be of maximum rated voltage (208 or 240 Volt, depending on heating element) listed on the serial plate. Do not connect dryer to 110, 115, or 120 Volt circuit.

Heating elements are available for field installation in dryers which are to be connected to electrical service of different voltage than that listed on serial plate, such as 208 Volt.

NOTE: Branch circuit wire size requirements to laundry room outlet are shown in table below.

Wire Length	Wire
Less than 15 ft. [4.5 m]	Listed No. 10 AWG Copper wire only
Longer than 15 ft. [4.5 m]	Listed No. 8 AWG Copper wire only

Table 6

The power cord connection between wall receptacle and dryer terminal block IS NOT supplied with dryer. Type of power cord and gauge of wire must conform to local codes.

IMPORTANT: Use only a new U.L. listed No. 10 (copper wire only) three or four conductor power supply cord kit rated 240 Volts (minimum) 30 Amperes and labeled as suitable for use in a clothes dryer.

Three-Wire

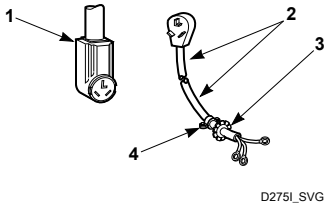

Four-Wire

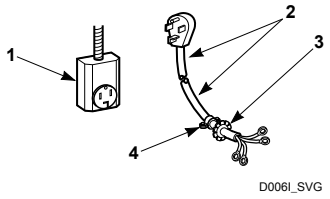

1. Typical Receptacle
2. Power Cord
3. Stain Relief Nut
4. Strain Relief

Figure 9

© Copyright, Alliance Laundry Systems LLC - DO NOT COPY or TRANSMIT

Three-Wire Connection

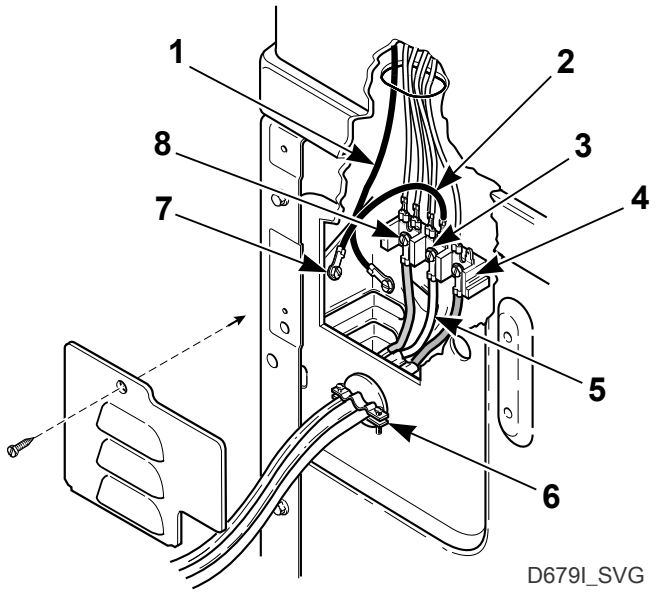

1. Ground Wire
2. Ground to Neutral Wire
3. Neutral Terminal
4. “L2” Terminal
5. Center Wire (Neutral)
6. Strain Relief (Not supplied with dryer)
7. Ground Screw
8. “L1” Terminal

Figure 10

Four-Wire Connection

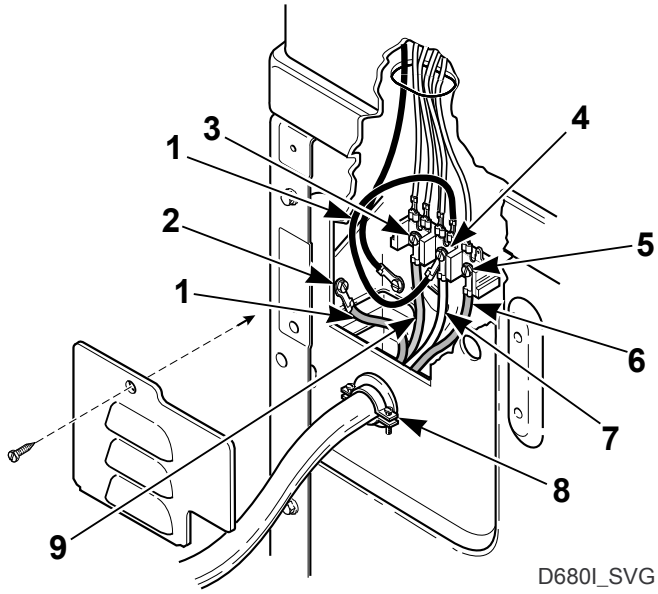

1. Ground Wire
2. Ground Screw
3. “L1” Terminal
4. Neutral Terminal
5. “L2” Terminal
6. Black Wire
7. White Wire (Neutral)
8. Strain Relief (Not supplied with dryer)
9. Red Wire

Figure 11

NOTE: Dryer is shown with access cover removed for illustration purposes only. NEVER operate the dryer with access cover removed.

Connecting Power Cord with Three-Wire Plug

NOTE: Four-wire cord is required for new branch-circuit installations, mobile homes or where codes do not permit grounding through neutral.

NOTE: The power cord is NOT supplied with the electric dryer. Type of power cord and gauge of wire must conform to local codes and instructions. The method of wiring the dryer is optional and subject to local code requirements.

NOTE: Connect the dryer to the power supply with the MAXIMUM RATED VOLTAGE listed on the serial plate.

© Copyright, Alliance Laundry Systems LLC -
DO NOT COPY or TRANSMIT

NOTE: Use COPPER WIRE only.

Shorter than 15 ft. (4.5 m) – use 10 AWG
Longer than 15 ft. (4.5 m) – use 8 AWG

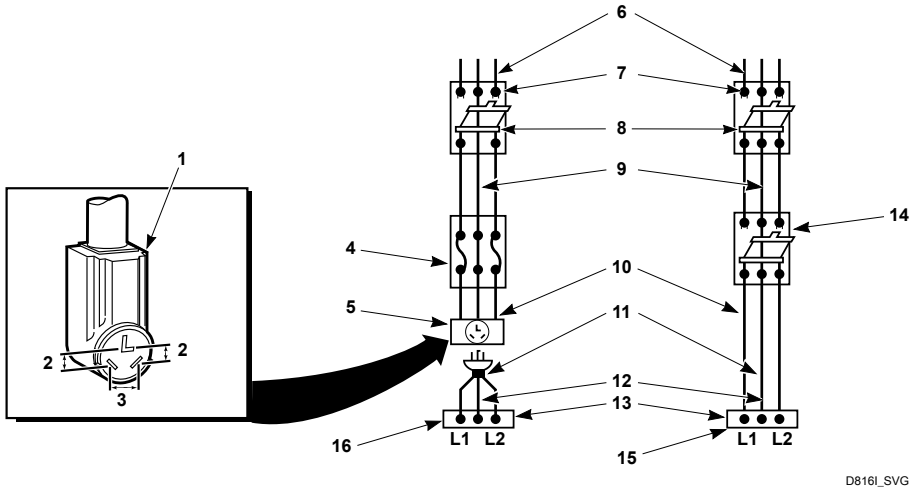

1. A typical 30-Amp Three-Wire Receptacle NEMA Type 10-30R
2. 120 ± 12 V.A.C.
3. 240 ± 12 V.A.C.
4. Intermediate Fuse Box (may be omitted if service entrance box is fused)
5. Wall Receptacle
6. Power Supply
7. 3-Wire Earth/Ground Neutral 120/240 Volt, 60 Hertz AC 1 Phase Service Entrance Switch Box (Refer to NOTE above)
8. 30 Ampere Fuses or Circuit Breaker
9. Neutral Wire
10. Metallic or Non-Metallic Sheathed Cable (Copper Wire Only)
11. Power Cord (Not supplied with dryer)
12. Neutral
13. Terminal Block in Dryer
14. Intermediate Shut-Off Box (may or may not be fused)
15. Direct Connection
16. Power Cord Connection

Figure 12

1. Disconnect power to dryer.
2. Remove access cover from rear of dryer.

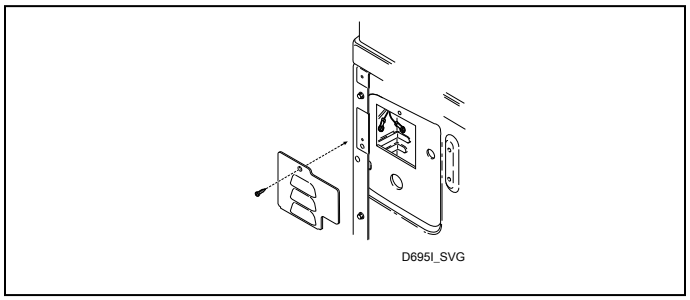

Figure 13

3. Use a strain relief and insert end of power cord through power supply hole.

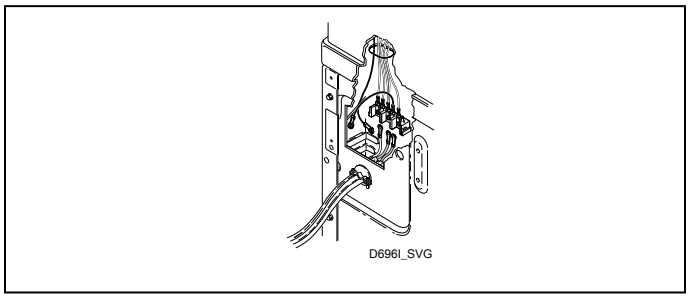

Figure 14

© Copyright, Alliance Laundry Systems LLC -
DO NOT COPY or TRANSMIT

4. Use the three screws from the accessories bag to attach the power cord wires to the terminal block. Refer to *Figure 15.*

3-Wire Connection

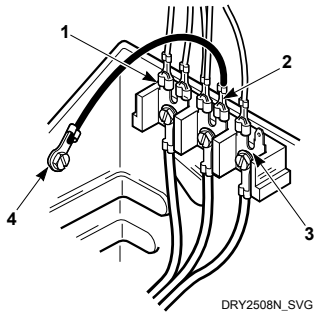

1. "L1" Terminal
2. Neutral Terminal
3. "L2" Terminal
4. Earth/Ground to Bulkhead

Figure 15

5. Using a screwdriver, tighten all screws firmly.

   IMPORTANT: Failure to tighten these screws firmly may result in wire failure at the terminal block.

6. Secure the strain relief to the power cord, or wires, where they enter the dryer cabinet.
7. Check the continuity of the earth/ground connection before plugging the cord into an outlet. Use an acceptable indicating device connected to the center earth/ground pin of the plug and the green screw on the back of the cabinet.
8. Reinstall access cover and screw.

Connecting Power Cord with Four-Wire Plug

NOTE: Four-wire cord is required for new branch-circuit installations, mobile homes or where codes do not permit grounding through neutral.

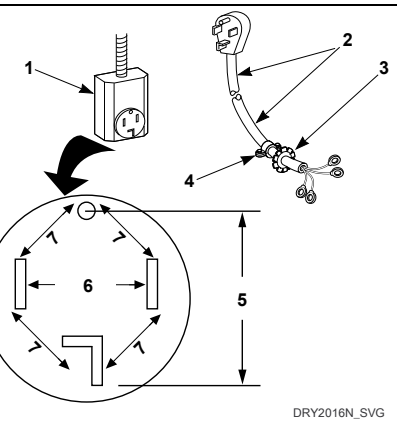

1. Typical Four-Wire Receptacle
2. Power Cord – Not Supplied with Dryer
3. Strain Relief Nut
4. Strain Relief
5. 0 V.A.C.
6. 240 ± 12 V.A.C.
7. 120 ± 12 V.A.C.

Figure 16

1. Disconnect power to dryer.
2. Remove access cover from rear of dryer.

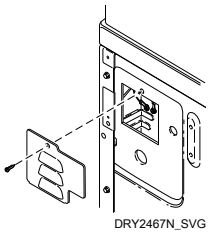

Figure 17

3. Remove earth/ground screw from earth/ground to neutral wire and save for use in Step 5. Earth/ground to neutral wire will be attached to the neutral terminal in Step 6.

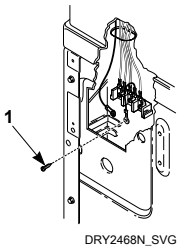

1. Earth/Ground Screw

Figure 18

© Copyright, Alliance Laundry Systems LLC -
DO NOT COPY or TRANSMIT

4. Use a strain relief and insert end of power cord through power supply hole.

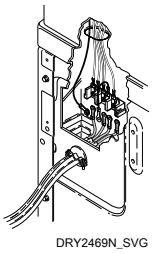

1. Strain Relief

Figure 19

5. Attach power cord earth/ground (green) wire to rear bulkhead using earth/ground screw removed in Step 3.

4-Wire Connection

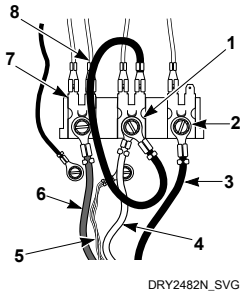

1. Neutral Terminal
2. "L2" Terminal
3. Black
4. White
5. Earth/Ground
6. Red
7. "L1" Terminal
8. Earth/Ground to Neutral Wire

Figure 20

6. Use the three screws from the accessories bag to attach the remaining power cord wires to the terminal block as follows:
   a. Red wire to "L1" terminal.
   b. Black wire to "L2" terminal.
   c. White wire to Neutral terminal.

   NOTE: When installing the white wire, loop the free eyelet end of the earth/ground to neutral wire (removed in Step 3) and attach along with the white wire to the neutral (center) terminal on the terminal block.
7. Using a screwdriver, tighten all screws firmly.

   IMPORTANT: Failure to tighten these screws firmly may result in wire failure at the terminal block.
8. Secure the strain relief to the power cord, or wires, where they enter the dryer cabinet.
9. Check the continuity of the earth/ground connection before plugging the cord into an outlet. Use an acceptable indicating device connected to the center earth/ground pin of the plug and the green screw on the back of the cabinet.
10. Reinstall access cover and screw.

Reverse Door, if Desired

NOTE: Doors with windows cannot be reversed.

The door on this dryer is completely reversible. To reverse door proceed as follows:

1. Remove four hinge attaching screws.

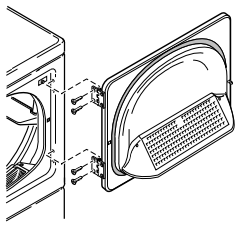

Figure 21

2. Remove all nine screws.

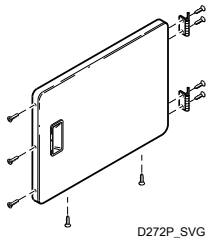

Figure 22

3. Pull bottom of door liner out, then pull down, removing door liner from door panel.

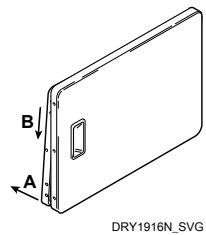

Figure 23

4. Rotate door panel 180 degrees as shown.

© Copyright, Alliance Laundry Systems LLC -
DO NOT COPY or TRANSMIT

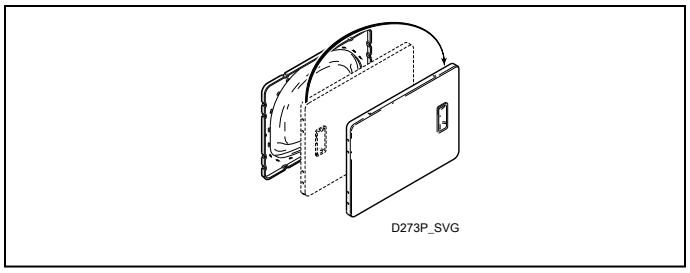

Figure 24

5. Remove door strike from door liner and reinstall on opposite side.

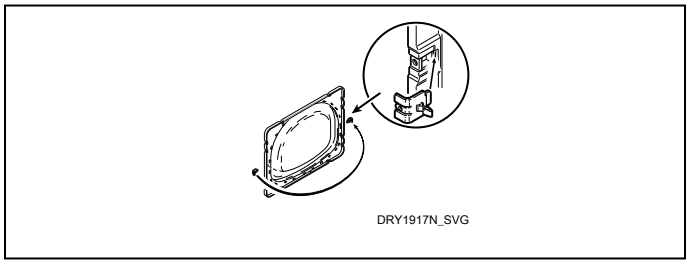

Figure 25

6. Insert liner under flange on bottom of door, then push top of door liner into place.

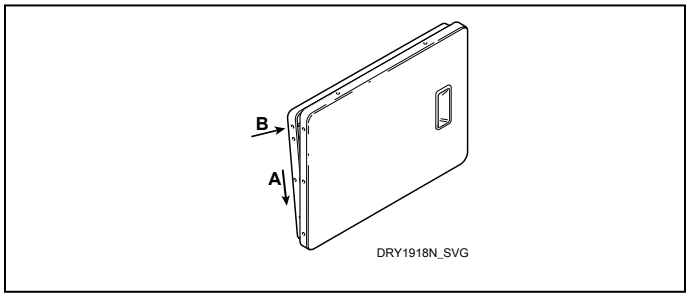

Figure 26

7. Reinstall nine screws removed in Step 2.

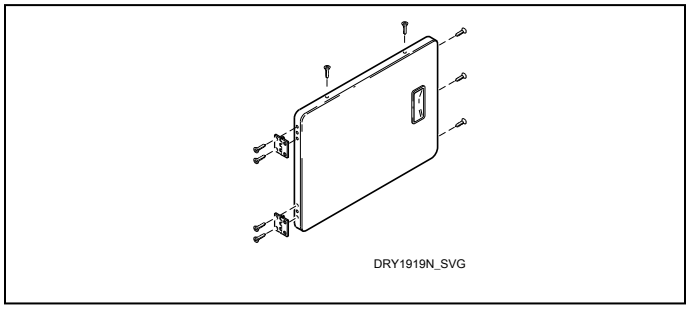

Figure 27

8. Using screwdriver, remove two door plugs, and reinstall on opposite side of door opening.

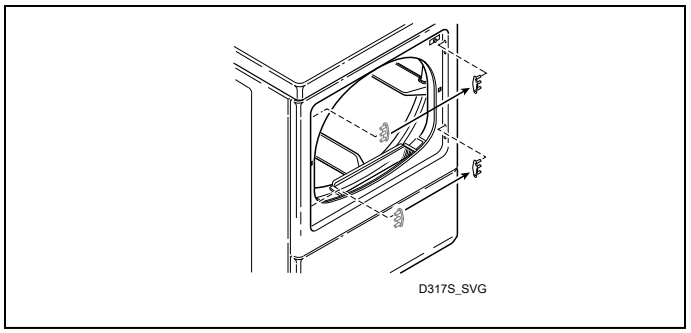

Figure 28

9. Reinstall four hinge attaching screws, removed in Step 1.

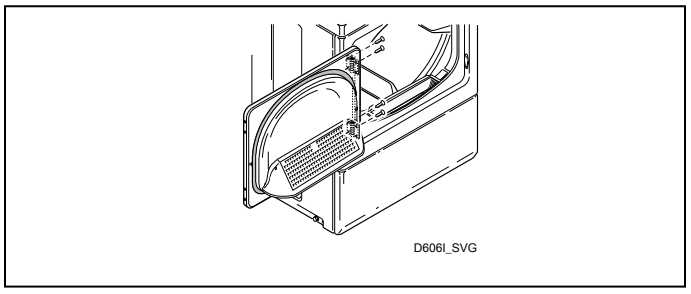

Figure 29

Wipe Out Inside of Dryer

1. Before using dryer for the first time, use an all-purpose cleaner, or a detergent and water solution, and a damp cloth to remove shipping dust from inside dryer drum.

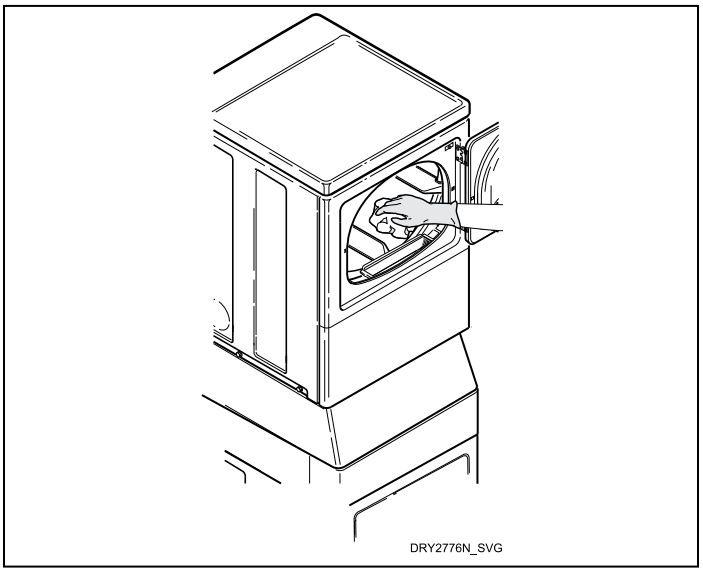

Figure 30

Plug In the Dryer

This appliance is to be supplied through a residual current de-

© Copyright, Alliance Laundry Systems LLC -
DO NOT COPY or TRANSMIT

vice (RCD) having a rated residual operating current not exceeding 30 mA.

WARNING

The appliance must not be supplied through an external switching device, such as a timer, or connected to a circuit that is regularly switched on and off by a utility.

W943

Electric Dryer

Connect the dryer to an electrical power source. Refer to Connect Electrical Plug section for information on connecting power cord.

Connect to 30 Amp Circuit

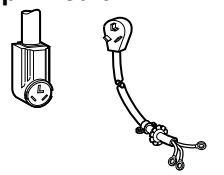

Figure 31

Gas Dryer

Dryer requires 120 Volt, 60 Hertz electrical supply and comes equipped with a 3-prong earth/ground plug. Refer to serial plate for specific electrical requirements.

NOTE: The wiring diagram is located behind the control panel, inside the control cabinet.

WARNING

To reduce the risk of fire, electric shock, serious injury or death, all wiring and grounding MUST conform with the latest edition of the National Electrical Code, ANSI/NFPA 70, or the Canadian Electrical Code, CSA C22.1, and such local regulations as might apply. It is the customer's responsibility to have the wiring and fuses installed by a qualified electrician to make sure adequate electrical power is available to the dryer.

W521

When plugging in the dryer:

- DO NOT overload circuits.
- DO NOT use an extension cord.
- DO NOT use an adapter.
- DO NOT operate other appliances on the same circuit. Use separately fused 15 Amp circuits.

The dryer is designed to be operated on a separate branch, polarized, three-wire, effective earth/ground, 120 Volt, 60 Hertz, AC (alternating current) circuit protected by a 15 Ampere fuse, equivalent fusetron or circuit breaker.

The three-prong earth/ground plug on the power cord should be plugged directly into a polarized three-slot effective earth/ground receptacle rated 120 Volts AC (alternating current) 15 Amps. Refer to *Figure 32* to determine correct polarity of the wall receptacle.

Plug Cord Into Separately Fused 15 Amp Circuit

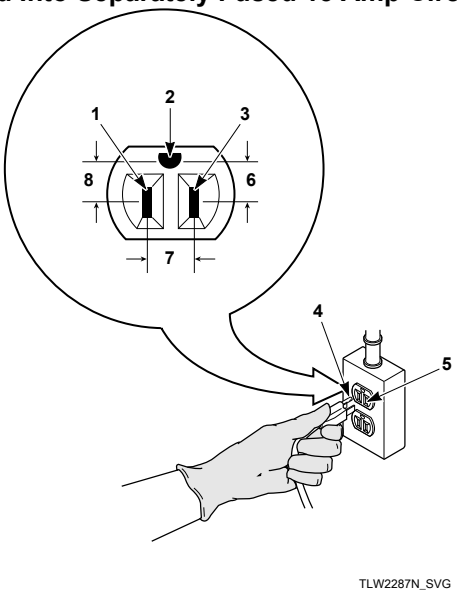

1. L1
2. Earth/Ground
3. Neutral
4. Round Earth/Ground Plug
5. Neutral Side
6. 0 V.A.C.
7. 120 ± 12 V.A.C.
8. 120 ± 12 V.A.C.

Figure 32

Earth/Ground Information

This appliance must be properly connected to protective earth/ground. In the event of malfunction or breakdown, the earth/ground will reduce the risk of electric shock by providing a path of least resistance for electric current.

The dryer is equipped with a cord having an equipment earth/ground conductor and a three-prong earth/ground plug. The three-prong earth/ground plug on the power cord should be plugged directly into a polarized three-slot effective earth/ground receptacle rated 110/120 Volts AC (alternating current) 15 Amps.

© Copyright, Alliance Laundry Systems LLC -
DO NOT COPY or TRANSMIT

WARNING

This unit is equipped with a three-prong (earth/ ground) plug for your protection against shock hazard and should be plugged directly into a protective earth/ ground three-prong receptacle. Do not cut or remove the earth/ground prong from this plug.

W823

WARNING

Improper connection of the equipment earth/ground conductor can result in a risk of electric shock. Check with a qualified electrician or service person if you are in doubt as to whether the dryer is properly connected to a protective earth/ground.

W886

Do not modify the plug provided with the dryer – if it will not fit the outlet, have a proper outlet installed by a qualified electrician.

NOTE: Have a qualified electrician check the polarity of the wall receptacle. If a voltage reading is measured other than that illustrated, the qualified electrician should correct the problem.

Do not operate other appliances on the same circuit.

WARNING

To reduce the risk of an electric shock or fire, DO NOT use an extension cord or an adapter to connect the dryer to the electrical power source.

W037

Recheck Steps

Refer to Installer Checklist on the back cover of this manual and make sure that dryer is installed correctly. After installation is complete, run the dryer through a cycle to test it's operation.

Check Heat Source

Electric Dryers

1. Close the loading door and start the dryer in a heat setting (refer to the operation instructions).
2. After the dryer has operated for three minutes, the exhaust air or exhaust pipe should be warm.

Gas Dryers

IMPORTANT: This operation is to be conducted by qualified personnel only.

1. To view the burner flame, remove the lower front panel of the dryer.
2. Close the loading door and start the dryer in a heat setting (refer to the operation instructions). The dryer will start, the igniter will glow red and the main burner will ignite.

   IMPORTANT: If all air is not purged out of gas line, gas igniter may go off before gas is ignited. If this happens, after approximately two minutes igniter will again attempt gas ignition.

   IMPORTANT: If igniter does not light, make sure gas is turned on.
3. After either dryer has operated for approximately five minutes, observe burner flame through lower front panel.
4. Adjust the air shutter to obtain a soft, uniform blue flame. (A lazy, yellow-tipped flame indicates lack of air. A harsh, roaring, very blue flame indicates too much air.) Adjust the air shutter as follows:
   a. Loosen the air shutter lockscrew.
   b. Turn the air shutter to the left to get a luminous yellow-tipped flame, then turn it back slowly to the right to obtain a steady, soft blue flame.
   c. After the air shutter is adjusted for proper flame, tighten the air shutter lockscrew securely.
5. Reinstall the lower front panel.

WARNING

To reduce the risk of serious injury or death, lower front panel must be in place during normal operation.

W158

6. After either dryer has operated for approximately three minutes, exhaust air or exhaust pipe should be warm.

© Copyright, Alliance Laundry Systems LLC - DO NOT COPY or TRANSMIT

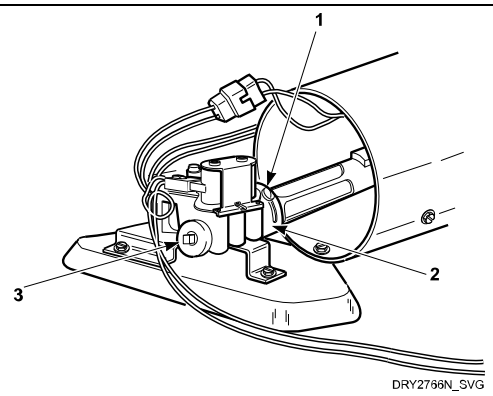

1. Air Shutter Lockscrew
2. Air Shutter
3. 3.1 mm [1/8 in.] Pipe Plug (For checking manifold pressure)

Figure 33

© Copyright, Alliance Laundry Systems LLC -
DO NOT COPY or TRANSMIT

Vending

Coin Slide Guards

Using sheet metal screws from accessories bag (located in lower cylinder), install coin slide guards (located in accessories bag in lower cylinder) to front of dryer's control cabinet. Refer to *Figure 34*.

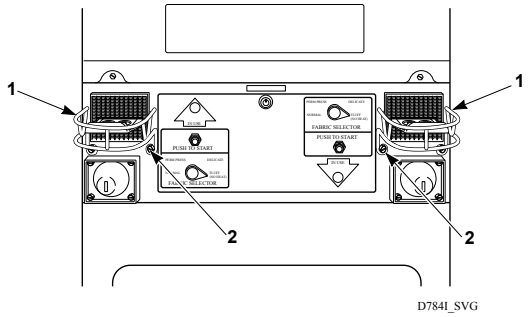

1. Coin Slide Guard
2. Sheet Metal Screws

Figure 34

NOTE: Coin slides and coin drawers are shown for illustration only. You must obtain them locally.

Coin Slide and Non-Metered Models

Power-Up Mode

Shortly after power is applied to the dryer, the control will flash once to indicate the machine is ready to be used. If a cycle was running previously, the control will blink and then stay lit, indicating there is still time remaining from the previous cycle. If the control was not previously running a cycle, the control will be in Ready Mode.

Ready Mode

In Ready Mode, the control waits for the vend to be satisfied before entering Start Mode.

Start Mode

In Start Mode, the vend has been satisfied, but the Start button has not been pressed. The IN USE LED will be lit. The timer will not count down until the Start button is pressed.

Run Mode

In Run Mode, the control is running a cycle. The IN USE LED is lit.

Door Open Mode

In Door Open Mode, the control turns off the heater and motor when the door is opened during a run cycle. The timer will continue to count down time and the IN USE LED is lit.

End of Cycle Mode

In End of Cycle Mode, a cycle is complete and the IN USE LED is off. The control remains in this mode until the door is opened or additional vend has been satisfied.

Top-Offs (Coin Slide Models)

Any time the control receives a coin slide pulse during a cycle it will add the programmed dry time to the time currently remaining in the cycle. The IN USE LED will flash briefly to indicate the coin input. The maximum cycle time is 99 minutes. The control will not add time beyond 99 minutes. The cool down time will not change. If the control receives a coin slide pulse during cool down it will exit cool down and start heating with the cycle time equal to the programmed time.

Temperature Selector Switch

Drying temperature is selected using the Temperature Selector Switch. Temperature options for cycles are NO HEAT, LOW, MEDIUM and HIGH.

Error Display Mode

The control enters Error Display Mode to display thermistor errors. The heater is turned off, the IN USE LED flashes to indicate the error (refer to paragraphs below), and the timer will continue to count down time. The control remains in Error Display Mode until the control senses the thermistor has returned to an acceptable heating range, the cycle ends or machine is powered down.

Open Thermistor

If the control senses a temperature less than 0°F when the heat has been on for at least three minutes it will set an open thermistor error. The control will flash the IN USE LED twice separated by a one and a half second pause. This sequence is repeated as long as the Open Thermistor error is sensed.

Shorted Thermistor

If the control senses a temperature greater than 210 ± 4°F during an active cycle it will set a Shorted Thermistor error. The control will flash the IN USE LED three times separated by a one and a half second pause. Unplug dryer or turn circuit breaker off/on to clear error. This sequence is repeated as long as the Shorted Thermistor error is sensed.

Centrifugal Switch Error

If the control senses that the motor has been engaged for at least three seconds and the centrifugal switch is sensed as open it will set a centrifugal switch error. The control will flash the IN USE LED five times separated by a one and a half second pause. Unplug dryer or turn circuit breaker off/on to clear error. Check for dust or lint in centrifugal switch to reduce future errors.

Setting Dry Time Dipswitches

There are two banks of dipswitches on the dryer control: Dipswitch1 and Dipswitch2. Each bank has eight switches: Dipswitch1 (Switch 1-8) and Dipswitch2 (Switch 1-8). Dipswitch1

© Copyright, Alliance Laundry Systems LLC -
DO NOT COPY or TRANSMIT

configures machine definition. Dipswitch2 configures vended cycle definition. Refer to *Table 7* and *Table 8* for dipswitch options.

NOTE: The control reads the dipswitch settings at power-up. The control must be powered down to change the dipswitch settings.

NOTE: The control must be powered down for 10 seconds before the dipswitch can be changed.

Dipswitch1 Bank

Refer to *Table 7.*

Dipswitch1 Bank		
Switch	**OFF**	**ON**
1	120 VAC supply	240 VAC supply
2	Unused	Unused
3	Non-Vended	Vended
4	Unused	Unused
5	Unused	Unused
6	Unused	Unused
7	Unused	Unused
8	Unused	Unused

Table 7

Dipswitch2 Bank

In Dipswitch2 bank, dipswitches 1 - 6 can be used to add dry time per vend. There is always at least one minute of dry time (all switches OFF). Setting one or more dipswitches to ON extends the total dry time per vend by that amount of minutes. The maximum cycle length is 99 minutes. Heat and cooldown time combined can never be longer than 99 minutes. Refer to *Table 8.*

Dipswitch 7 specifies Cool-Down time for vended machines. The Cool-Down time is three minutes when this switch is OFF, and ten minutes when the switch is ON. For non-vended machines, Cool-Down time is determined by the position of the Temperature Selector Switch.

Dipswitch 8 is used for the cycle reset on vended machines. If the switch is OFF (default), the control will save the time left on a cycle in case of a power failure. If the switch is ON, the control will clear the cycle and return to Ready Mode if there is a power failure. On non-vended machines, the control will clear any cycle time and reset to Start Mode, regardless of the positions of these dipswitches.

Dipswitch2 Bank		
Switch	**OFF**	**ON**
1	No additional dry time per vend	Plus 1 minute dry time per vend
2	No additional dry time per vend	Plus 2 minute dry time per vend
3	No additional dry time per vend	Plus 4 minute dry time per vend
4	No additional dry time per vend	Plus 8 minute dry time per vend
5	No additional dry time per vend	Plus 16 minute dry time per vend
6	No additional dry time per vend	Plus 32 minute dry time per vend
7	Short Cool-Down time	Long Cool-Down time
8	Save cycle time on long powerfail	Clear cycle time on long powerfail

Table 8

Resetting Cycle Time to Zero

To remove any cycle time that may have accumulated on the control during setup, the cycle time on the control can be reset to zero.

To reset the time, unplug the dryer and set dipswitch 8 to ON position. Restore power to the dryer for 10 seconds and once again unplug dryer. Set dipswitch 8 to OFF position and restore power to the dryer.

© Copyright, Alliance Laundry Systems LLC -
DO NOT COPY or TRANSMIT

Dipswitch Settings

	Heat Switch Number					
Heat Time Per Coin Pulse (in minutes)	**1**	**2**	**3**	**4**	**5**	**6**
1	OFF	OFF	OFF	OFF	OFF	OFF
2	**ON**	OFF	OFF	OFF	OFF	OFF
3	OFF	**ON**	OFF	OFF	OFF	OFF
4	**ON**	**ON**	OFF	OFF	OFF	OFF
5	OFF	OFF	**ON**	OFF	OFF	OFF
6	**ON**	OFF	**ON**	OFF	OFF	OFF
7	OFF	**ON**	**ON**	OFF	OFF	OFF
8	**ON**	**ON**	**ON**	OFF	OFF	OFF
9	OFF	OFF	OFF	**ON**	OFF	OFF
10	**ON**	OFF	OFF	**ON**	OFF	OFF
11	OFF	**ON**	OFF	**ON**	OFF	OFF
12	**ON**	**ON**	OFF	**ON**	OFF	OFF
13	OFF	OFF	**ON**	**ON**	OFF	OFF
14	**ON**	OFF	**ON**	**ON**	OFF	OFF
15	OFF	**ON**	**ON**	**ON**	OFF	OFF
16	**ON**	**ON**	**ON**	**ON**	OFF	OFF
17	OFF	OFF	OFF	OFF	**ON**	OFF
18	**ON**	OFF	OFF	OFF	**ON**	OFF
19	OFF	**ON**	OFF	OFF	**ON**	OFF
20	**ON**	**ON**	OFF	OFF	**ON**	OFF
21	OFF	OFF	**ON**	OFF	**ON**	OFF
22	**ON**	OFF	**ON**	OFF	**ON**	OFF
23	OFF	**ON**	**ON**	OFF	**ON**	OFF
24	**ON**	**ON**	**ON**	OFF	**ON**	OFF
25	OFF	OFF	OFF	**ON**	**ON**	OFF
26	**ON**	OFF	OFF	**ON**	**ON**	OFF
27	OFF	**ON**	OFF	**ON**	**ON**	OFF
28	**ON**	**ON**	OFF	**ON**	**ON**	OFF

continues...

Table 9

© Copyright, Alliance Laundry Systems LLC -
DO NOT COPY or TRANSMIT

	Heat Switch Number					
Heat Time Per Coin Pulse (in minutes)	**1**	**2**	**3**	**4**	**5**	**6**
29	OFF	OFF	**ON**	**ON**	**ON**	OFF
30	**ON**	OFF	**ON**	**ON**	**ON**	OFF
31	OFF	**ON**	**ON**	**ON**	**ON**	OFF
32	**ON**	**ON**	**ON**	**ON**	**ON**	OFF
33	OFF	OFF	OFF	OFF	OFF	**ON**
34	**ON**	OFF	OFF	OFF	OFF	**ON**
35	OFF	**ON**	OFF	OFF	OFF	**ON**
36	**ON**	**ON**	OFF	OFF	OFF	**ON**
37	OFF	OFF	**ON**	OFF	OFF	**ON**
38	**ON**	OFF	**ON**	OFF	OFF	**ON**
39	OFF	**ON**	**ON**	OFF	OFF	**ON**
40	**ON**	**ON**	**ON**	OFF	OFF	**ON**
41	OFF	OFF	OFF	**ON**	OFF	**ON**
42 (preset at factory)	**ON**	OFF	OFF	**ON**	OFF	**ON**
43	OFF	**ON**	OFF	**ON**	OFF	**ON**
44	**ON**	**ON**	OFF	**ON**	OFF	**ON**
45	OFF	OFF	**ON**	**ON**	OFF	**ON**
46	**ON**	OFF	**ON**	**ON**	OFF	**ON**
47	OFF	**ON**	**ON**	**ON**	OFF	**ON**
48	**ON**	**ON**	**ON**	**ON**	OFF	**ON**
49	OFF	OFF	OFF	OFF	**ON**	**ON**
50	**ON**	OFF	OFF	OFF	**ON**	**ON**
51	OFF	**ON**	OFF	OFF	**ON**	**ON**
52	**ON**	**ON**	OFF	OFF	**ON**	**ON**
53	OFF	OFF	**ON**	OFF	**ON**	**ON**
54	**ON**	OFF	**ON**	OFF	**ON**	**ON**
55	OFF	**ON**	**ON**	OFF	**ON**	**ON**
56	**ON**	**ON**	**ON**	OFF	**ON**	**ON**
57	OFF	OFF	OFF	**ON**	**ON**	**ON**

continues...

Table 9

© Copyright, Alliance Laundry Systems LLC -
DO NOT COPY or TRANSMIT

	Heat Switch Number					
Heat Time Per Coin Pulse (in minutes)	**1**	**2**	**3**	**4**	**5**	**6**
58	**ON**	OFF	OFF	**ON**	**ON**	**ON**
59	OFF	**ON**	OFF	**ON**	**ON**	**ON**
60	**ON**	**ON**	OFF	**ON**	**ON**	**ON**
61	OFF	OFF	**ON**	**ON**	**ON**	**ON**
62	**ON**	OFF	**ON**	**ON**	**ON**	**ON**
63	OFF	**ON**	**ON**	**ON**	**ON**	**ON**
64	**ON**	**ON**	**ON**	**ON**	**ON**	**ON**

Table 9

Test Setting

When testing coin slide operation or other troubleshooting, set dipswitch with this shorter cycle:

1. Unplug the machine power cord.
2. Record the machine control dipswitch settings. Then set them all to the off position. Refer to *Figure 1*.
3. Plug in the machine and initiate a cycle.

   NOTE: With all the control dipswitches off, the total cycle time will be four minutes long.
4. Once all the testing is complete, unplug the machine and reset the dipswitches to their original settings.
5. Plug in the machine.

Slide Extension Assembly

1. Remove slide extension parts from parts accessories bag included in unit.
2. If installing a Greenwald coin slide, position extension lever (to be installed on extension bracket) with arm that has one star facing down. If installing a Monarch or ESD coin slide, position lever with arm that has two stars facing down. Refer to *Figure 35*.

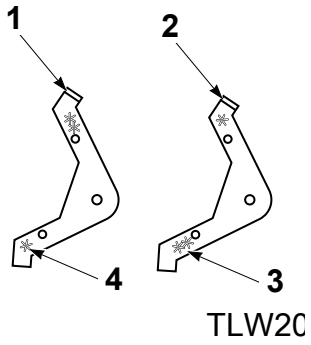

1. Greenwald Coin Slide
2. Monarch or ESD Coin Slide
3. Two Stars
4. One Star

Figure 35

3. Install extension lever with rounded corner facing away from extension bracket using shoulder bolt, flat washer and nut. Refer to *Figure 36*.
4. Install spring to extension bracket with hook facing down. Install other end of spring to extension lever with hook facing left while standing in front of unit. Refer to *Figure 36*.

© Copyright, Alliance Laundry Systems LLC -
DO NOT COPY or TRANSMIT

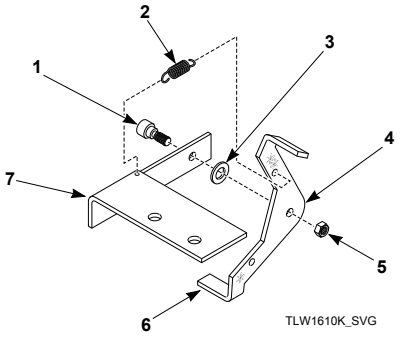

1. Shoulder Bolt
2. Spring
3. Flat Washer
4. Rounded Corner
5. Nut
6. Extension Lever
7. Extension Bracket

Figure 36

5. Install extension bracket and lever assembly onto coin slide bracket using two screws and locknuts. Refer to *Figure 37.*

   IMPORTANT: Install coin slide bracket with side marked "A" facing up and toward extension bracket and lever assembly. Refer to *Figure 37*.

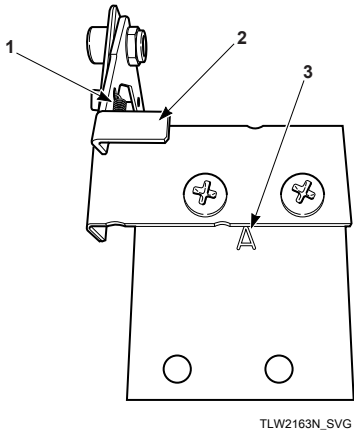

1. Spring Installed
2. Extension Bracket and Lever Assembly
3. Coin Slide Bracket - Letter "A"

Figure 37

6. Install coin slide extension assembly onto top of coin slide using two remaining screws and lockwashers. Place lockwasher under head of screws, above bracket "A". Refer to *Figure 38.*

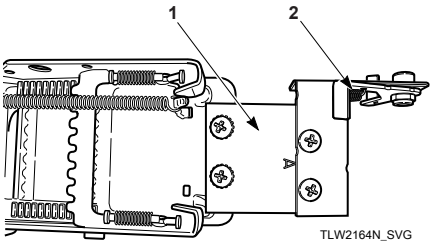

1. Coin Slide Extension Assembly
2. Spring Installed

Figure 38

7. Before installing coin slide and extension, make sure ground wire is tucked under control shield to provide clearance for coin slide. Refer to *Figure 39.*

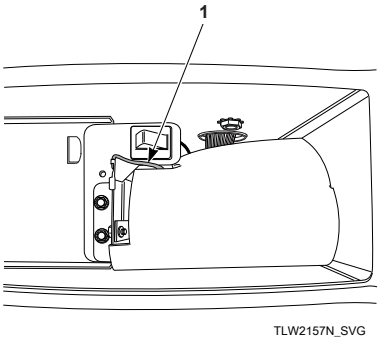

1. Ground Wire Placement

Figure 39

Installing Coin Slide Assembly Into Meter Case: Option One

1. Insert coins and partially extend coin slide.
2. Insert coin slide on its side through meter case opening. Then rotate 90 degrees to its proper orientation.
3. Return coin slide and hook slide pins onto meter case.
4. Continue coin slide installation according to manufacturer's instructions.
5. Check to make sure coin slide is operating properly by inserting coins and starting a cycle. The IN USE light will turn on, or flash if it is already on, to indicate proper operation.

   NOTE: To avoid long run-down time (45 minutes factory default) when testing operation, refer to Test Setting section.

Installing Coin Slide Assembly Into Meter Case: Option Two

1. Install coin slide according to manufacturer's instructions.

© Copyright, Alliance Laundry Systems LLC -
DO NOT COPY or TRANSMIT

2. Insert coins into coin slide and slowly push slide in. Stop before coins fall into coin box. This will allow installing extension through meter case service door opening.
3. Install slide extension onto top of coin slide using two screws. Refer to *Figure 38.*
4. Check to make sure coin slide is operating properly by inserting coins and starting a cycle. The IN USE light will turn on, or flash if it is already on, to indicate proper operation.

   NOTE: To avoid long run-down time (45 minutes factory default) when testing operation, refer to Test Setting section.

© Copyright, Alliance Laundry Systems LLC -
DO NOT COPY or TRANSMIT

Operation

Operation Instructions for Nonmetered and Coin Slide Dryers

WARNING

To reduce the risk of fire, electric shock, or injury to persons, read the IMPORTANT SAFETY INSTRUCTIONS before operating this appliance.

W727

IMPORTANT: Remove all objects from pockets such as lighters and matches.

This appliance shall not be used to dry off solvents or dry cleaning fluids.

IMPORTANT: Before using dryer for the first time, use an all-purpose cleaner, or a detergent and water solution, and a damp cloth to remove shipping dust from inside of dryer drum.

IMPORTANT: Remove all sharp objects from laundry to avoid tears and rips to items during normal machine operation.

Clean Lint Filter

Clean lint filter before each use.

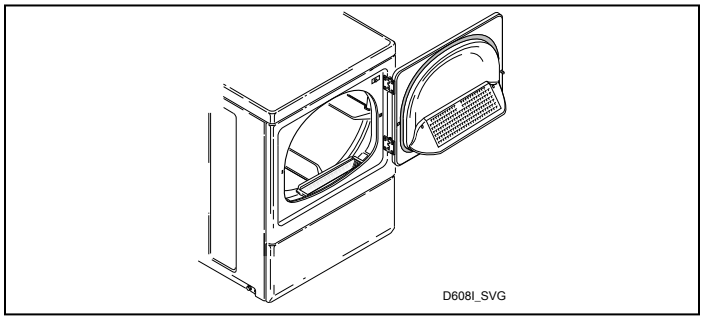

Figure 40

Load Laundry

1. Load clothes loosely into dryer drum (18.0 pounds [8.2 kg] maximum dry clothes load).
2. Add fabric softener sheet if desired.

   IMPORTANT: To avoid damage to dryer, do not use more than one fabric softener sheet per load.

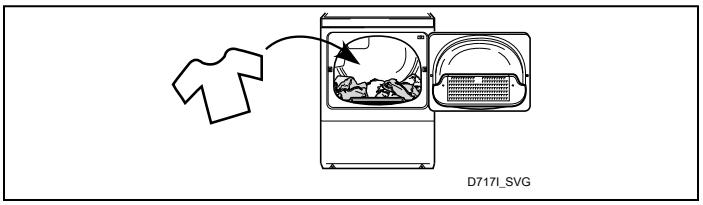

Figure 41

Close Loading Door

1. Close loading door.
2. Dryer will not operate with the door open.

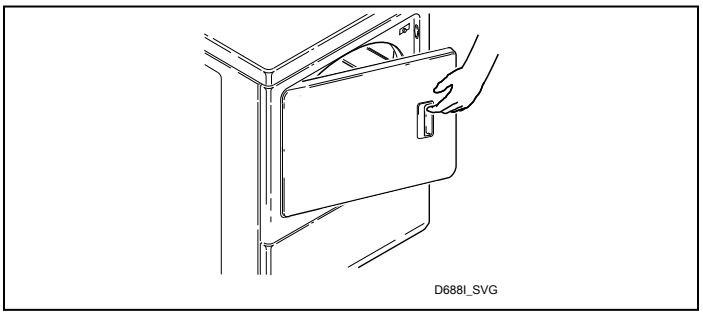

Figure 42

Determine Proper Dryer

The direction of the arrow indicates which dryer is being used.

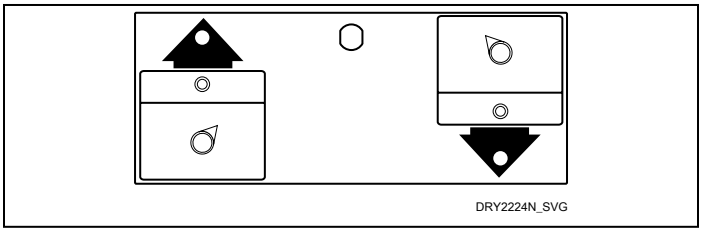

Figure 43

Set Fabric Selector

Select NORMAL for cottons, PERM PRESS for permanent press, DELICATE for sensitive items or NO HEAT for items that require no heat.

NOTE: Always follow manufacturer's care labels.

© Copyright, Alliance Laundry Systems LLC - DO NOT COPY or TRANSMIT

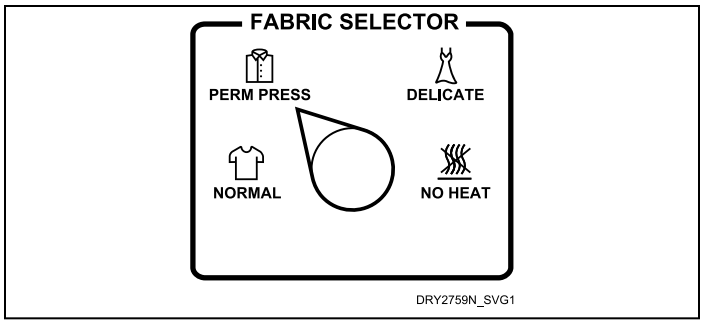

Figure 44

Start Dryer

Nonmetered Models

1. Rotate timer knob to desired time setting (up to 60 minutes).
2. Press the PUSH-TO-START button. IN USE light will come on (indicating start of cycle).

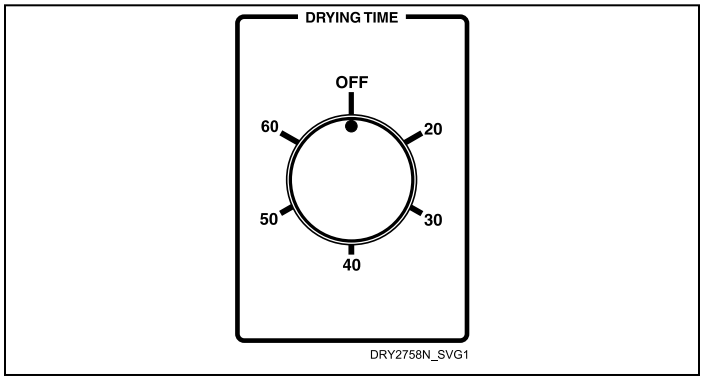

Figure 45

Coin Slide Models

1. Place coin(s) in slide and carefully push in as far as possible and then pull slide out as far as possible.
2. After IN USE light comes on (indicating start of cycle), press the PUSH-TO-START button.

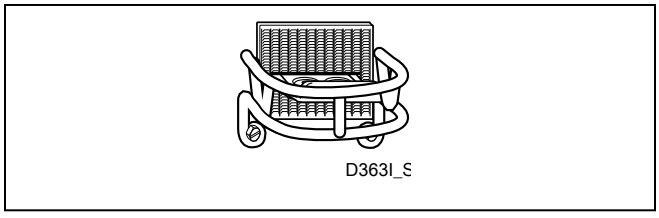

Figure 46

3. Remove knits when slightly damp because overdyring may cause shrinkage. Do not tumble dry knit woolens.

Should dryer stop before cycle is completed, the motor overload protector may have cycled. Refer to ***Maintenance*** section.

NOTE: This machine includes an extended tumble feature. Starting 20 minutes after a cycle ends, the cylinder will tumble for two minutes every hour without heat, up to 18 hours or until door is opened.

Operation Instructions for MDC Dryers

WARNING

To reduce the risk of fire, electric shock, or injury to persons, read the IMPORTANT SAFETY INSTRUCTIONS before operating this appliance.

W727

IMPORTANT: Remove all objects from pockets such as lighters and matches.

This appliance shall not be used to dry off solvents or dry cleaning fluids.

IMPORTANT: Before using dryer for the first time, use an all-purpose cleaner, or a detergent and water solution, and a damp cloth to remove shipping dust from inside of dryer drum.

IMPORTANT: Remove all sharp objects from laundry to avoid tears and rips to items during normal machine operation.

Clean Lint Filter

Clean lint filter before each use.

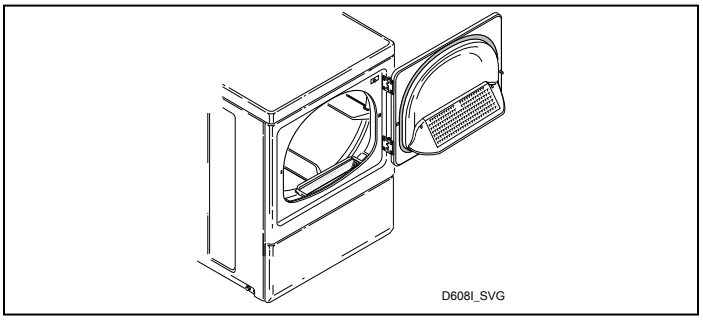

Figure 47

Load Laundry

1. Load clothes loosely into dryer drum (18.0 pounds [8.2 kg] maximum dry clothes load).
2. Add fabric softener sheet if desired.

   IMPORTANT: To avoid damage to dryer, do not use more than one fabric softener sheet per load.

© Copyright, Alliance Laundry Systems LLC - DO NOT COPY or TRANSMIT

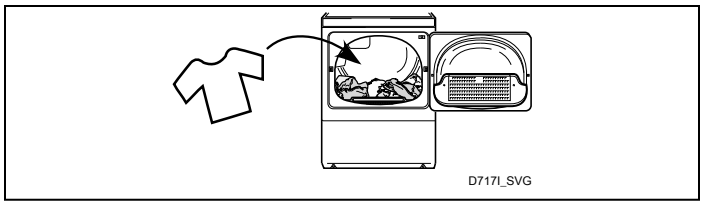

Figure 48

Close Loading Door

1. Close loading door.
2. Dryer will not operate with the door open.

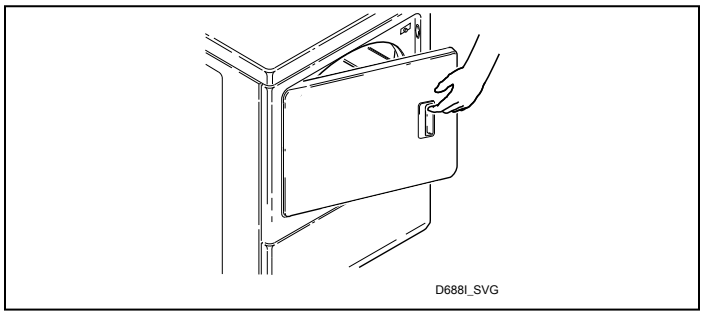

Figure 49

Determine Proper Dryer

The direction of the arrow indicates which dryer is being used.

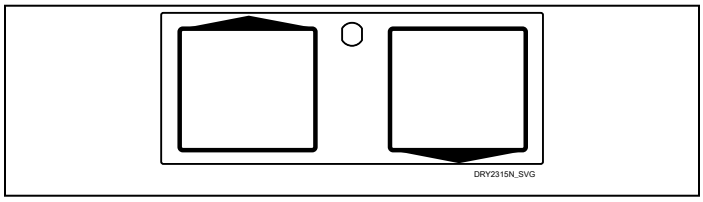

Figure 50

Set Fabric Selector

Select HIGH TEMP, MED TEMP, LOW TEMP or DELICATES by pushing touchpad.

NOTE: Always follow manufacturer's care labels.

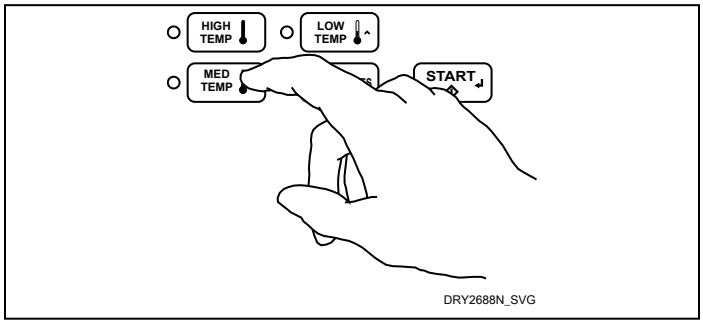

Figure 51

Insert Coins or Card

To Insert Coins

1. Insert coin(s) in coin slot.
2. Check pricing as seen on digital display.

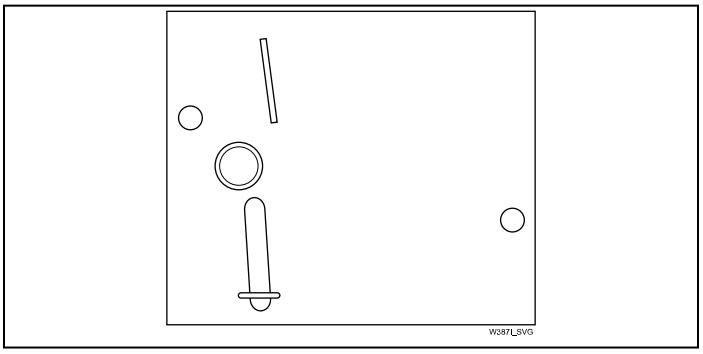

Figure 52

To Insert Card

1. Insert card into opening.

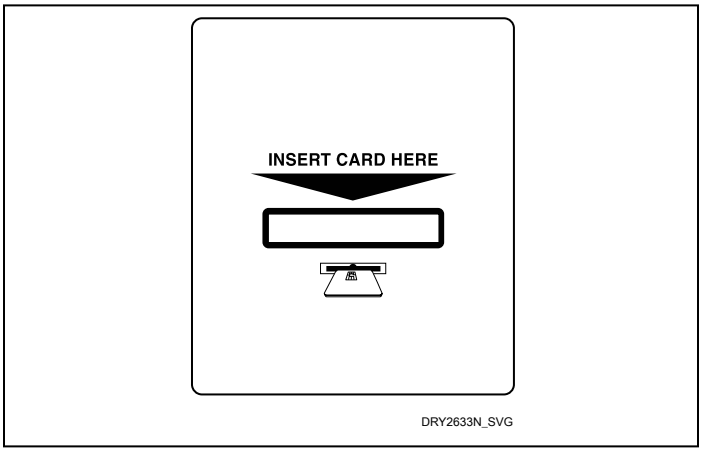

Figure 53

Start Dryer

1. To start dryer, push START pad.
2. To stop dryer at any time, open the door.
3. To restart the dryer, close door and push START pad. Cycle is completed when time remaining reaches 00 minutes.

If Additional Time Feature is turned on, additional dryer time may be purchased at cycle start or while dryer is running.

Remove knits when slightly damp because overdrying may cause shrinkage. Do not tumble dry knit woolens.

© Copyright, Alliance Laundry Systems LLC -
DO NOT COPY or TRANSMIT

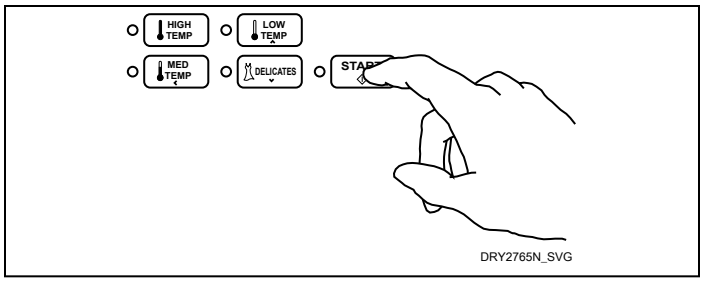

Figure 54

IMPORTANT: The final part of dryer cycle occurs without heat (cool down cycle) to ensure that items in dryer are left at a temperature that ensures that the items will not be damaged.

WARNING

To prevent the risk of fire, never stop a dryer before the end of the drying cycle unless all items are quickly removed and spread out so that the heat is dissipated.

W756

Indicator Lights

START	START is lit whenever the dryer is not in a cycle, the full vend price has been satisfied and the dryer door is closed. When the START pad is pressed, the cycle will begin or resume.
DRYING	DRYING is lit to indicate that one of the heated cycles (HIGH TEMP, MED TEMP, LOW TEMP or DELICATES) is currently in operation. DRYING will turn off at the end of a heated cycle or when the COOL DOWN cycle begins.
COOL DOWN	COOL DOWN is lit whenever the COOL DOWN portion of a heated cycle is active.

© Copyright, Alliance Laundry Systems LLC -
DO NOT COPY or TRANSMIT

Maintenance

Lubrication

All moving parts are sealed in a permanent supply of lubricant or are equipped with oilless bearings. Additional lubrication will not be necessary.

Care of Your Dryer

WARNING

To reduce the risk of an electric shock, serious injury or death, disconnect the electrical service to the dryer before cleaning the interior.

W132

Dryer Interior

Wipe the surfaces using a soft cloth and household cleaner or a non-abrasive paste of powdered laundry detergent and hot water, followed by a short heat cycle with a load of rags.

To remove crayon or ball point ink off the dryer drum, put the heat on high and use old rags in the dryer to absorb the crayon or ink. If unsuccessful, contact the appliance dealer. DO NOT use any chemicals in the dryer.

IMPORTANT: The use of chlorine bleach for removing any discolorations should be avoided because bleach could damage the finish.

Cabinet

Wipe the dryer cabinet as needed. If detergent, bleach or other washing products have been spilled on the dryer, wipe immediately. Some products will cause permanent damage if spilled on the cabinet.

Control Panel

Use only a damp or sudsy cloth for cleaning the control panel. Some spray pretreat products may harm the finish on the control panel. DO NOT use products that contain alcohol on the control panel.

Exhaust System

WARNING

To reduce the risk of electric shock, disconnect the electrical service to the dryer before cleaning.

W043

WARNING

Any disassembly requiring the use of tools must be performed by a suitably qualified service person.

W299

The exhaust duct should be inspected after one year of use and cleaned if necessary by a qualified service person to remove any lint build-up. Inspect and clean exhaust duct every one to two years as required thereafter.

NOTE: This recommended maintenance is not covered under the terms of the warranty.

The weather hood should be checked frequently to make sure the dampers move freely, dampers are not pushed in and that nothing has been set against them.

Keep dryer area clear and free from combustible materials, gasoline and other flammable vapors and liquids.

Do not obstruct the flow of combustion and ventilation air.

NOTE: Verify proper operation after servicing.

Lint Filter

CLEAN THE LINT FILTER BEFORE DRYING EACH LOAD. (Refer to *Figure 55* for lint filter location.) Cleaning the lint filter is important because a layer or pad of lint on the filter will block the flow of air through the dryer, thus reducing the efficiency of the dryer. The clothes will take longer to dry and energy will be wasted.

The lint filter may be washed if needed. Annually remove lint filter and screw to vacuum the duct under it.

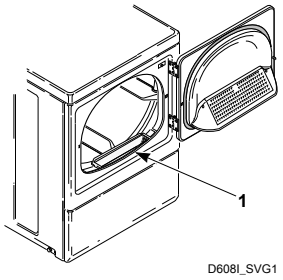

1. Lint Filter

Figure 55

Motor Overload Protector

The dryer's motor overload protector stops the motor automatically in the event of an overload. After cooling, the overload

© Copyright, Alliance Laundry Systems LLC -
DO NOT COPY or TRANSMIT

protector will reset itself. Dryer can be restarted by pressing the START pad. If overload protector cycles again, remove the dryer from use and call the service person to correct the problem.

For Energy Conservation

- Make sure the lint filter is always clean.
- Do not overload dryer.
- Do not overdry clothes.
- Remove items to be ironed while still damp.
- Large loads of similar fabrics dry the most efficiently. However, dry permanent press in smaller loads to prevent wrinkling.
- Use the correct temperature FABRIC SELECTOR setting for the type of fabric being dried.
- Locate your dryer so the exhaust duct is as short and straight as possible.
- Do not open the door during the drying cycle.
- Plan to do your laundry on low humidity days; your clothes will dry faster.
- Should you plan to dry several loads, do them one after another, then you do not have to reheat the dryer unit's interior parts each time.

© Copyright, Alliance Laundry Systems LLC -
DO NOT COPY or TRANSMIT

Troubleshooting

Try these troubleshooting tips before making a service call. They may save you time and money.

Dryer Symptom	Possible Cause/Solution
Dryer won't start	• Insert coin(s) or card, if required. • For dryers equipped with a power cord, make sure the power cord is plugged all the way into the electrical outlet. • Make sure loading door is closed. • Press START pad. • Make sure the laundry room fuse(s) isn't blown or loose, or circuit breakers aren't open. • The dryer itself does not have an electrical fuse. An electric dryer has an electrical circuit with two fuses. • Check if motor overload protector has cycled. Wait 10 minutes and try again.
Dryer won't heat	• Make sure the laundry room fuse(s) isn't blown or loose, or circuit breakers aren't open. • The dryer itself does not have an electrical fuse. An electric dryer has an electrical circuit with two fuses. • Make sure controls are in a HEAT setting. • Gas dryer only – Make sure equipment and main gas line valve is turned on. • Check exhaust duct to outside to see if it is kinked, blocked or needs cleaning. • Check weather hood to make sure flapper moves freely, has not been pushed in or has not been blocked.
Dryer doesn't dry clothes satisfactorily	• Check exhaust duct to outside to see if it is kinked, blocked or needs cleaning. • Check weather hood to make sure flapper moves freely, has not been pushed in or has not been blocked. • Clean the lint filter. • Make sure the load isn't too small. Small loads may not tumble properly or dry evenly. • Check load being dried. Heavy items dried with lightweight items will not dry as quickly as the rest of the load.
Dryer is noisy	• Check dryer for foreign objects (nails, coins, bobby pins, metal, plastic toys, etc.). Remove items from dryer. • Make sure dryer is level. Uneven leveling can cause vibration. • Normal operating sounds include the heat source going on and off and the humming of air moving through the dryer and exhaust system.
Clothes are too wrinkled	• Check heat setting. Overdrying can cause wrinkling. • Check load size. Large loads may not tumble properly and may cause wrinkling.

continues...

© Copyright, Alliance Laundry Systems LLC -
DO NOT COPY or TRANSMIT

Dryer Symptom	Possible Cause/Solution
Clothes have odor	• Check room for odors before drying clothes. Any odor (fried foods, paint, varnish, cleaners, burning wood, etc.) will transfer to clothing as the dryer draws air from the room. • Ventilate room before drying clothes.

© Copyright, Alliance Laundry Systems LLC -
DO NOT COPY or TRANSMIT

Contact Information

If service or replacement parts are needed, contact the source from where you purchased your unit. If you are unable to locate an authorized service center, navigate to *https://alliance-laundry.com/contact/* for the nearest Alliance Laundry Systems office for assistance.

WARNING

To reduce the risk of serious injury or death, DO NOT repair or replace any part of the unit or attempt any servicing unless specifically recommended in the user-maintenance instructions or in published user-repair instructions that you understand and have the skills to carry out.

W329

When contacting us about your unit, PLEASE GIVE THE MODEL AND SERIAL NUMBERS. The model and serial numbers are located on the serial plate. The serial plate will be in the location shown in *Figure 56.*

- Date Purchased
- Model Number
- Serial Number

Please include a copy of your bill of sale and any service receipts you have.

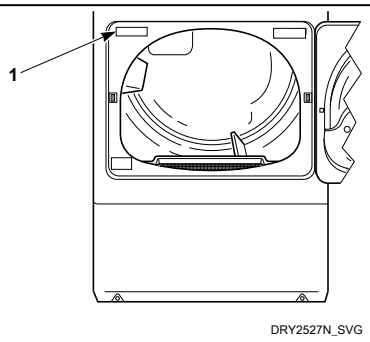

1. Serial Plate

Figure 56

© Copyright, Alliance Laundry Systems LLC -
DO NOT COPY or TRANSMIT

Installer Checklist

Fast Track for Installing the Dryer

1	Position and Level the Dryer.	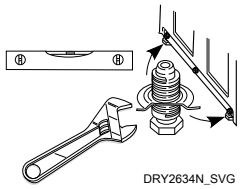 DRY2634N_SVG	6	Wipe Out Inside of Dryer.	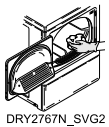 DRY2767N_SVG2
	CHECK			CHECK	
2	Connect Dryer Exhaust System.	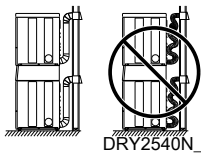 DRY2540N_	7	Plug In the Dryer.	Electric 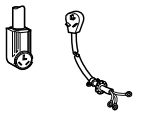 D275I_SVG1 Gas 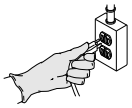 TLW2289N_SVG
	CHECK			CHECK	
3	GAS ONLY • Connect Gas Supply Pipe. • Check for Gas Leaks.	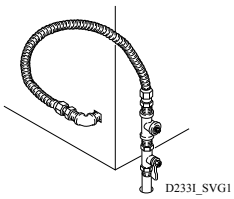 D233I_SVG1	8	Recheck Steps.	
	CHECK			CHECK	
4	ELECTRIC ONLY • Connect Electrical Cord.	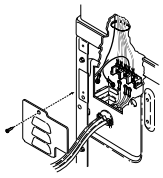 D699I_SVG1	9	Start and Run Dryer in Heat Setting to Verify Dryer is Heating.	
	CHECK			CHECK	
5	Reverse Door, if Desired.	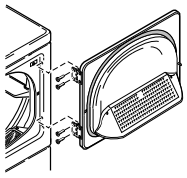 D675I_SVG1			
	CHECK				

Refer to the manual for more detailed information

© Copyright, Alliance Laundry Systems LLC -
DO NOT COPY or TRANSMIT