NSG80H60XR

SAMSUNG

Bespoke Smart Slide-In Gas Range 6.0 cu. ft. with No-Preheat Air Fry Max



Available Color

Stainless Steel
NSG80H60XR

Features

- No-Preheat Air Fry Max (Tray Included)
- True Convection
- Air Sous Vide
- Precision Knobs
- Fingerprint Resistant Finish
- Self Clean
- Storage Drawer

Convenience

- Wi-Fi Connectivity
- Voice Enabled
- Convection Auto Conversion
- Hidden Bake Element
- Child Safety Lock
- Delay Start
- Auto Oven Light
- Timer
- Sabbath Mode

Specifications

Black Enamel 5-Burner Cooktop

- Right Front: 17K BTU
- Left Front: 16K BTU
- Right Rear: 5K BTU
- Left Rear: 9.5K BTU
- Center (Round): 9.5K BTU

Oven

- Capacity: 6.0 cu. ft.
- Convection Element/Heater
- Convection Bake
- Convection Roast
- Bake
- Variable Broil: Low/High
- No-Preheat Air Fry Max
- Air Sous Vide
- Keep Warm
- Bread Proof

Dimensions

Oven Interior Dimensions (WxHxD)
Dimensions: $24\frac{13}{16}$" x $21\frac{5}{8}$" x $19\frac{5}{8}$"

Product Dimensions with Handle (WxHxD)
Dimensions: $29\frac{15}{16}$" x 36" – $36\frac{3}{4}$" (Adj.) x $28\frac{3}{8}$"
Weight: 176.1 lbs

Shipping Dimensions & Weight (WxHxD)
Dimensions: $33\frac{1}{16}$" x $41\frac{1}{8}$" x $30\frac{5}{16}$"
Weight: 198.6 lbs

Warranty

One (1) Year Parts and Labor

UPC

Finish	Model #	UPC Code
Stainless Steel	NSG80H60XR	198957273179

SmartThings

NSG80H60XR

SAMSUNG

Bespoke Smart Slide-In Gas Range 6.0 cu. ft. with No-Preheat Air Fry Max

Installation Specifications

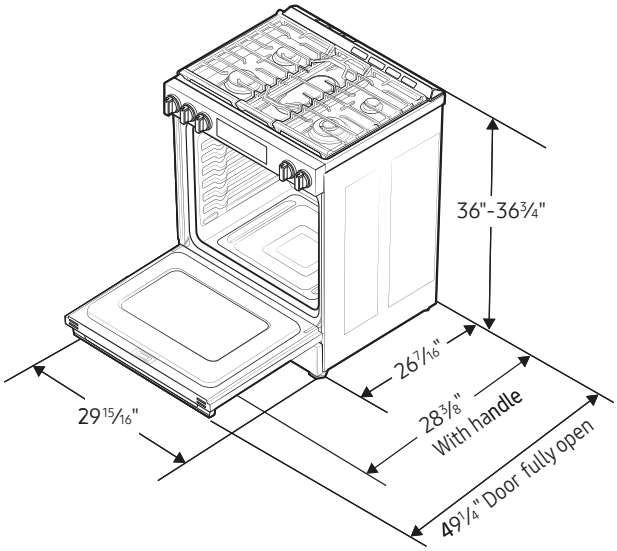

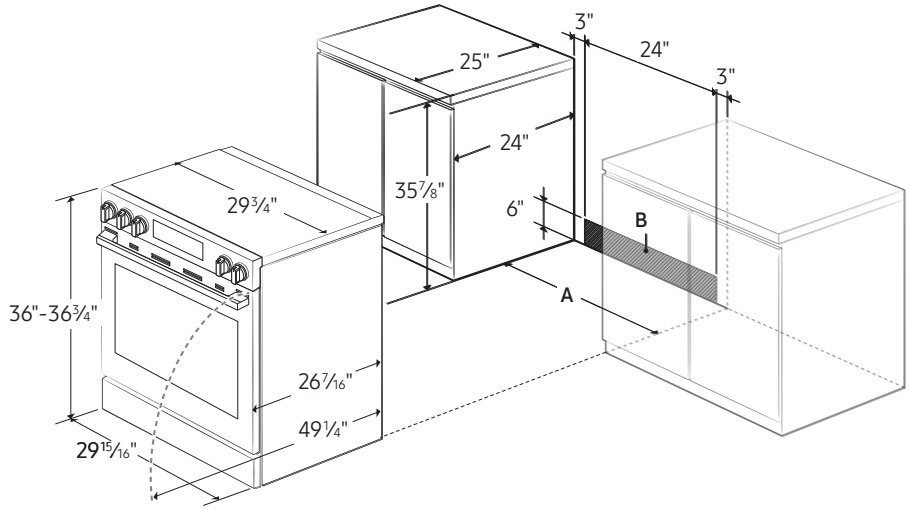

Electrical Requirements

120V/60 Hz
20 Amps

A: Cabinet opening minimum 30"
B: Acceptable electrical outlet area

IMPORTANT: If your cabinets are over 36¾" high, you must install this range on a hard, heat-resistant support that raises the surface of the range so that it is about even with the countertop.

Installing Your Range

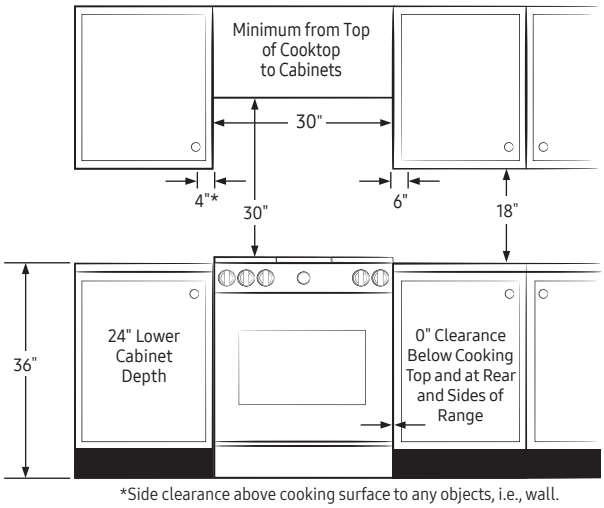

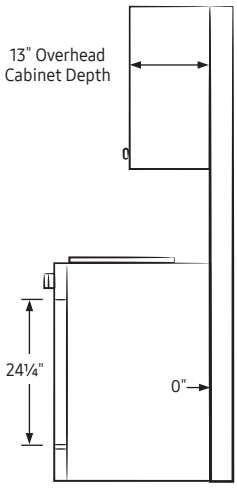

*Side clearance above cooking surface to any objects, i.e., wall.

IMPORTANT: Consult with Installation Manual for detailed instructions before installing. All ranges must be installed with the Anti-Tip bracket that is included.

Recommended Locations for Gas Piping and Electrical Outlets

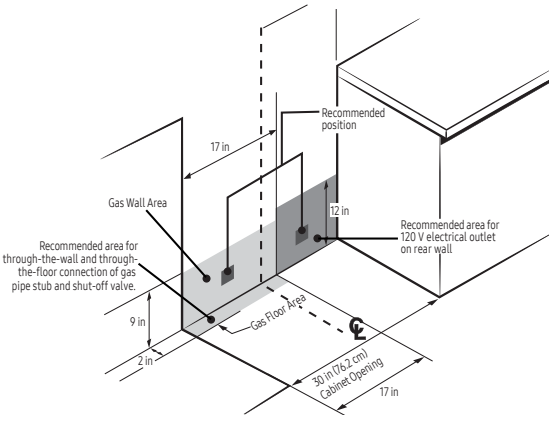

ADA Compliant

Actual color may vary. Design, specifications, and color availability are subject to change without notice. Non-metric weights and measurements are approximate.
©2026 Samsung Electronics America, Inc., 700 Sylvan Avenue, Englewood Cliffs, NJ 07632. Tel: 800-SAMSUNG. samsung.com. Samsung is a registered trademark of Samsung Electronics Co., Ltd.